INCH-POUND

MS90555G
w/AMENDMENT 1
26 August 2015
SUPERSEDING
MS90555G
21 November 2012

DETAIL SPECIFICATION SHEET

CONNECTOR, RECEPTACLE, ELECTRICAL, WALL MOUNTING, CLASS L (POWER SOURCE RECEPTACLE)

This specification is approved for use by all Departments and Agencies of the Department of Defense.

The requirements for acquiring the product described herein shall consist of this specification sheet and MIL-DTL-22992.

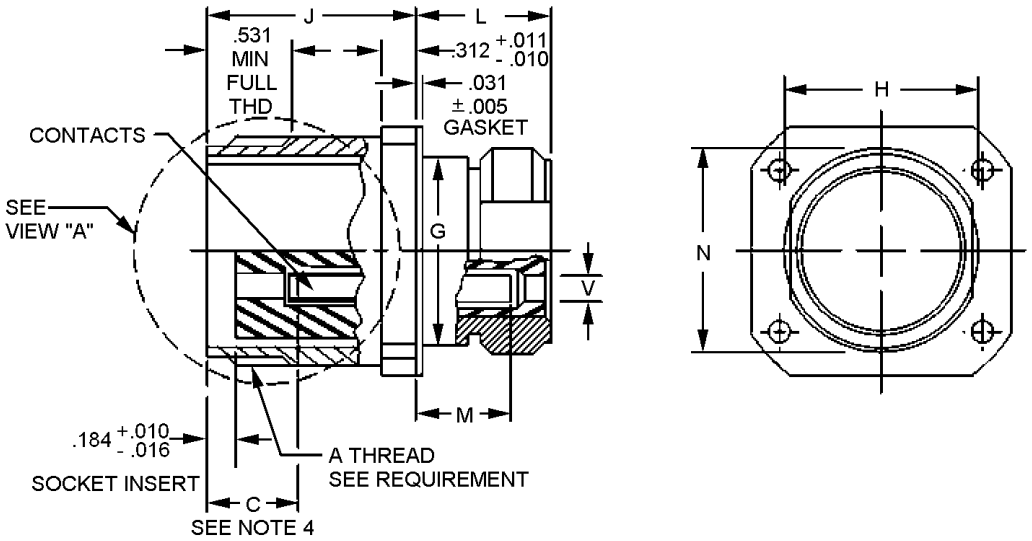

Inches	mm
.005	0.13
.010	0.25
.011	0.28
.016	0.41
.031	0.79
.164	4.17
.312	7.92
.531	13.49

FIGURE 1. Receptacle.

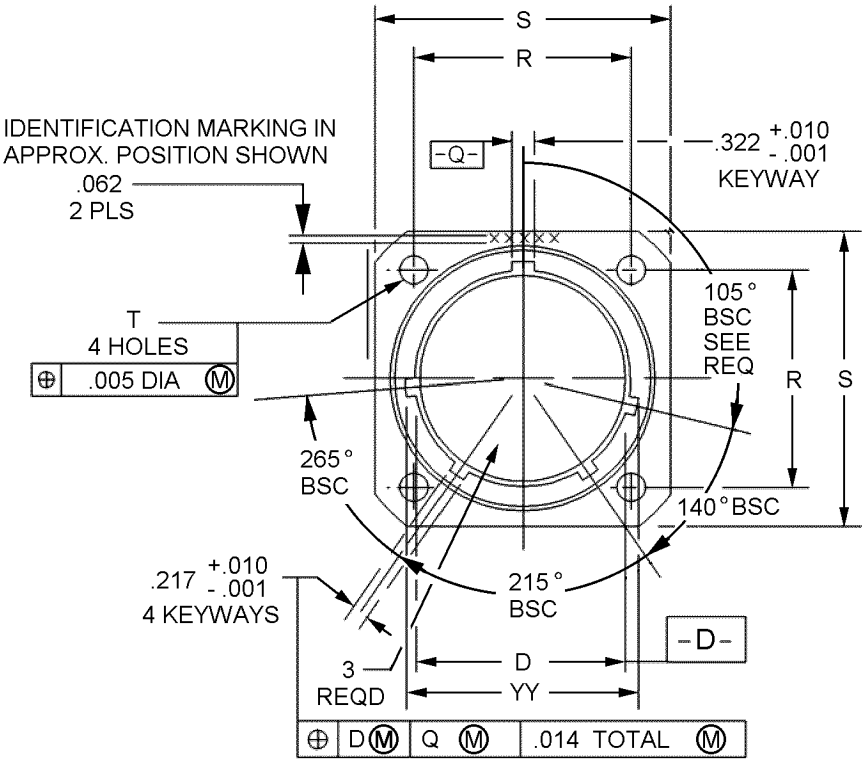

FIGURE 1. Receptacle – Continued.

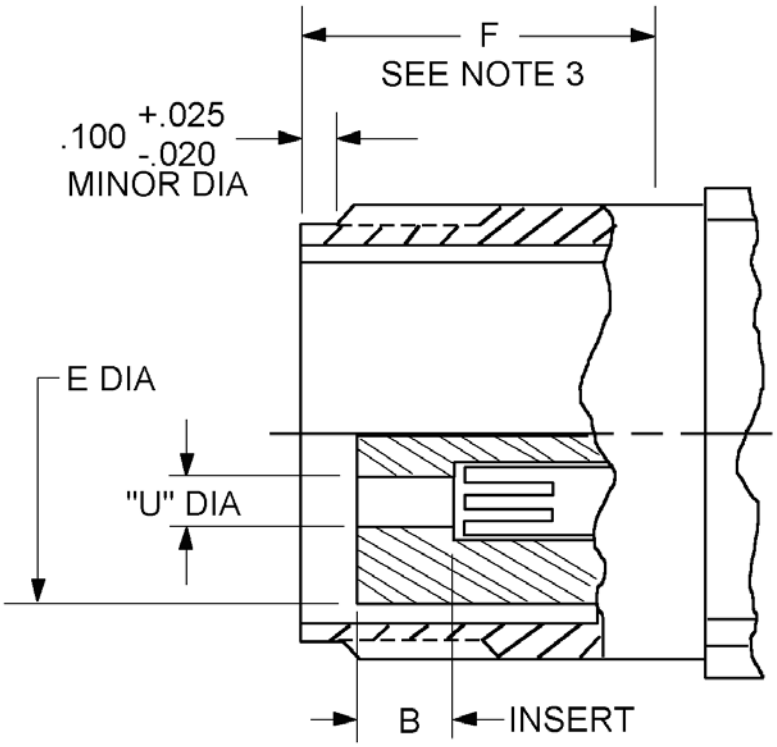

ENLARGED VIEW "A"

Contact size	U dia	V dia wire sealing range
4 / 0	.510 (12.95) / .515 (13.08)	.700 (17.78) / .790 (20.07)
2 / 0	.416 (10.57) / .421 (10.69)	.530 (13.46) / .655 (16.64)
1 / 0 – 1	.367 (9.32) / .372 (9.45)	.457 (11.61) / .585 (14.86)
4	.235 (5.97) / .240 (6.10)	.356 (9.04) / .430 (10.92)
6	.188 (4.78) / .193 (4.90)	.300 (7.62) / .360 (9.14)

Inches	mm
.020	0.508
.025	0.635
.100	2.54

FIGURE 1. Receptacle – Continued.

Shell size	A thread class 2A	B + .020 / - .030		C max		D dia + .005 / - .010	E dia max	F ± .005
		Phase and neutral	Ground	Phase and neutral	Ground			
28	2.000-.1428P-.2857L	.523 (13.28)	.523 (13.28)	.913 (23.19)	.913 (23.19)	1.536 (39.01)	1.281 (32.54)	1.514 (38.46)
32	2.250-.1428P-.2857L	.523 (13.28)	.523 (13.28)	.913 (23.19)	.913 (23.19)	1.786 (45.36)	1.562 (39.67)	1.514 (38.46)
44	3.000-.1428P-.2857L	.742 (18.85)	.273 (6.93)	1.138 (28.91)	.663 (16.84)	2.545 (64.64)	2.239 (56.87)	1.733 (44.02)
48	3.250-.1428P-.2857L	.742 (18.85)	.273 (6.93)	1.156 (29.36)	.663 (16.84)	2.755 (69.98)	2.494 (63.35)	1.733 (44.02)
52	3.500-.1428P-.2857L	.742 (18.85)	.273 (6.93)	1.156 (29.36)	.663 (16.84)	3.005 (76.33)	2.744 (69.70)	1.733 (44.02)

Shell size	G dia + .006 - .010	H + .001 - .010	J + .016 - .000	L ± .031	M ± .047	N dia + .011 - .020	R (BSC)	S + .021 - .020	T ± .005	YY dia + .010 - .006
28	1.938 (49.23)	1.812 (46.02)	2.188 (55.58)	1.376 (34.95)	.750 (19.05)	2.000 (50.80)	1.844 (46.84)	2.375 (60.33)	.177 (4.50)	1.692 (42.98)
32	2.188 (55.58)	2.062 (52.37)	2.188 (55.58)	1.376 (34.95)	.750 (19.05)	2.250 (57.15)	2.062 (52.37)	2.625 (66.68)	.209 (5.31)	1.942 (49.33)
44	3.062 (77.77)	2.812 (71.42)	2.532 (64.31)	1.438 (36.53)	.812 (20.62)	3.125 (79.38)	2.812 (71.42)	3.375 (85.73)	.281 (7.14)	2.692 (68.38)
48	3.312 (84.12)	3.062 (77.77)	2.532 (64.31)	1.438 (36.53)	.812 (20.62)	3.375 (85.73)	3.000 (76.20)	3.625 (92.08)	.281 (7.14)	2.911 (73.94)
52	3.562 (90.47)	3.312 (84.12)	2.532 (64.31)	1.438 (36.53)	.812 (20.62)	3.625 (92.08)	3.156 (80.16)	3.875 (98.43)	.281 (7.14)	3.161 (80.29)

NOTES:

1. Dimensions are in inches. Unless otherwise specified, tolerance is ± .016 (0.41 mm).
2. For protective cover, see MS90563.
3. F dimension from the front of the shell to the shoulder.
4. This is a depth at which a square ended gauge pin of the same basic diameter as the mating pin, first engages the spring of the socket contact.
5. Metric equivalent is given for information only.
6. L dimension applies when rear nut is fully engaged.

FIGURE 1. Receptacle – Continued.

REQUIREMENTS:

Dimensions and configurations: See figures 1 and 2.

Mating connectors: This receptacle mates with MS90556 plugs.

Inserts and contacts: Removable.

For final installation: Contacts will be assembled in all insert holes.

Shell finish: See MIL-DTL-22992.

Normal keyway position: See figure 1.

Alternate keyway positions: See figure 2.

Insert arrangements: See MS90565, MS14054, MS14055, and MS14057.

Cover: In accordance with MS90563, shall be supplied with the connector.

Socket contacts: In accordance with SAE-AS39029/49.

Part or Identifying Number (PIN) example:

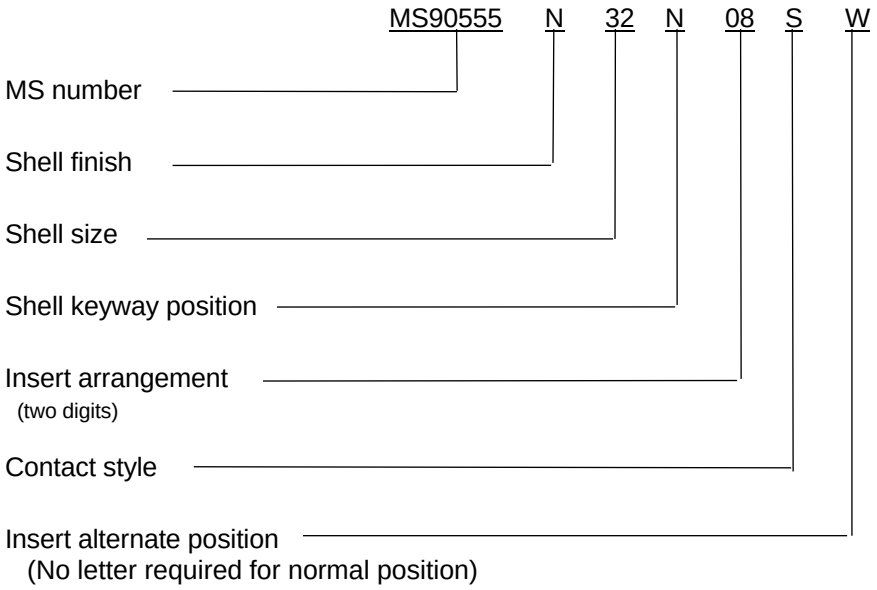

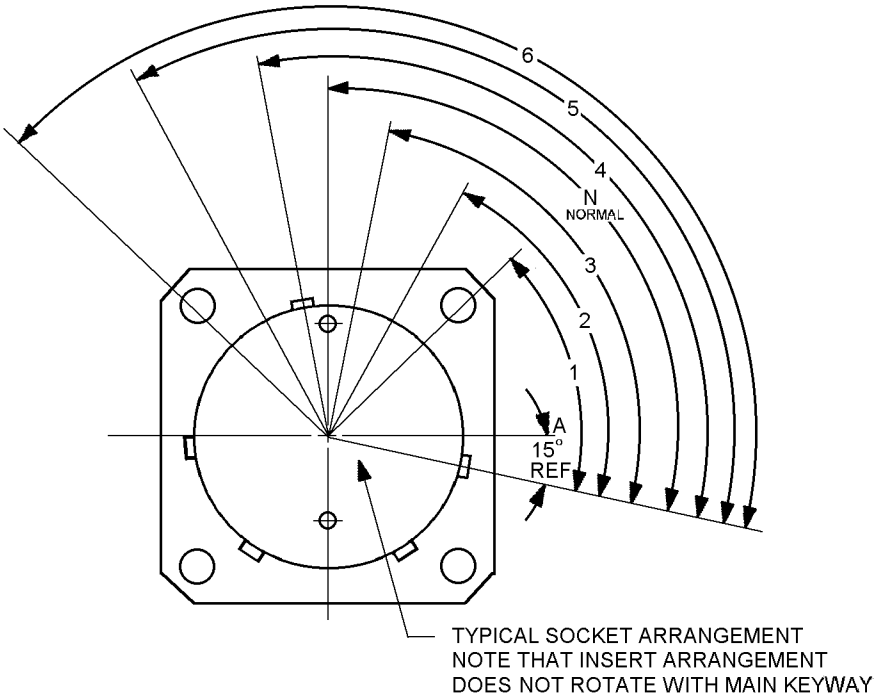

(FRONT FACE OF RECEPTACLE SHOWN)

Finish N (non-grounding assemblies).

Shell size	Shell main keyway positions 2 wire, 28 V dc
28	N (105°)
32	N (105°)
44	N (105°)
48	N (105°)
52	N (105°)

FIGURE 2. Alternate keyway position.

Finish C (grounding assemblies)

Shell size	Shell main keyway position (60 Hz and 400 Hz, see note 1)						
	1 ∅			3 ∅			3 ∅ (see note 2)
	2 wire		3 wire	4 wire			3 wire
	120 V	240 V	120/240 V	120/208 V	240/416 V	277/480 V	450/480 V
28	4 (120°)	5 (135°)	4 (120°)	4 (120°)	5 (135°)	6 (150°)	---
32	4 (120°)	5 (135°)	4 (120°)	4 (120°)	5 (135°)	6 (150°)	---
44	4 (120°)	---	4 (120°)	4 (120°)	5 (135°)	6 (150°)	1 (60°)
48	---	---	4 (120°)	4 (120°)	5 (135°)	6 (150°)	---
52	---	---	4 (120°)	4 (120°)	5 (135°)	6 (150°)	---

NOTES:

1. Discrimination of 60 Hz and 400 Hz assemblies is accomplished by alternate positioning of inserts. See applicable insert drawing for keying.
2. For Navy ground support equipment use only. Arrangements 44-51, 44-52 and 44-56 are not applicable.
3. Shell main keyway positions 2 and 3 are not used.

FIGURE 2. Alternate keyway position - Continued.

Amendment notations. The margins of this specification are marked with vertical lines to indicate modifications generated by this amendment. This was done as a convenience only and the Government assumes no liability whatsoever for any inaccuracies in these notations. Bidders and contractors are cautioned to evaluate the requirements of this document based on the entire content irrespective of the marginal notations.

Referenced documents. In addition to MIL-DTL-22992, this document references the following:

MS14054
MS14055
MS14057
MS90563
MS90556
MS90565
SAE-AS39029/49

CONCLUDING MATERIAL

Custodians:
Army - CR
Navy - EC
Air Force - 85
DLA – CC

Preparing activity:
DLA - CC

(Project 5935-2015-193)

Review activities:
Army – MI
Navy – AS, CG, MC, OS
Air Force – 19, 99

NOTE: The activities listed above were interested in this document as of the date of this document. Since organizations and responsibilities can change, you should verify the currency of the information above using the ASSIST Online database at https://assist.dla.mil.