INCH-POUND

MS17347F
16 January 2013
SUPERSEDING
MS17347E
20 December 2002

DETAIL SPECIFICATION SHEET

CONNECTOR, RECEPTACLE, ELECTRICAL, JAM NUT

This specification is approved for use by all Departments and Agencies of the Department of Defense.

The requirements for acquiring the product described herein shall consist of this specification sheet and MIL-DTL-22992.

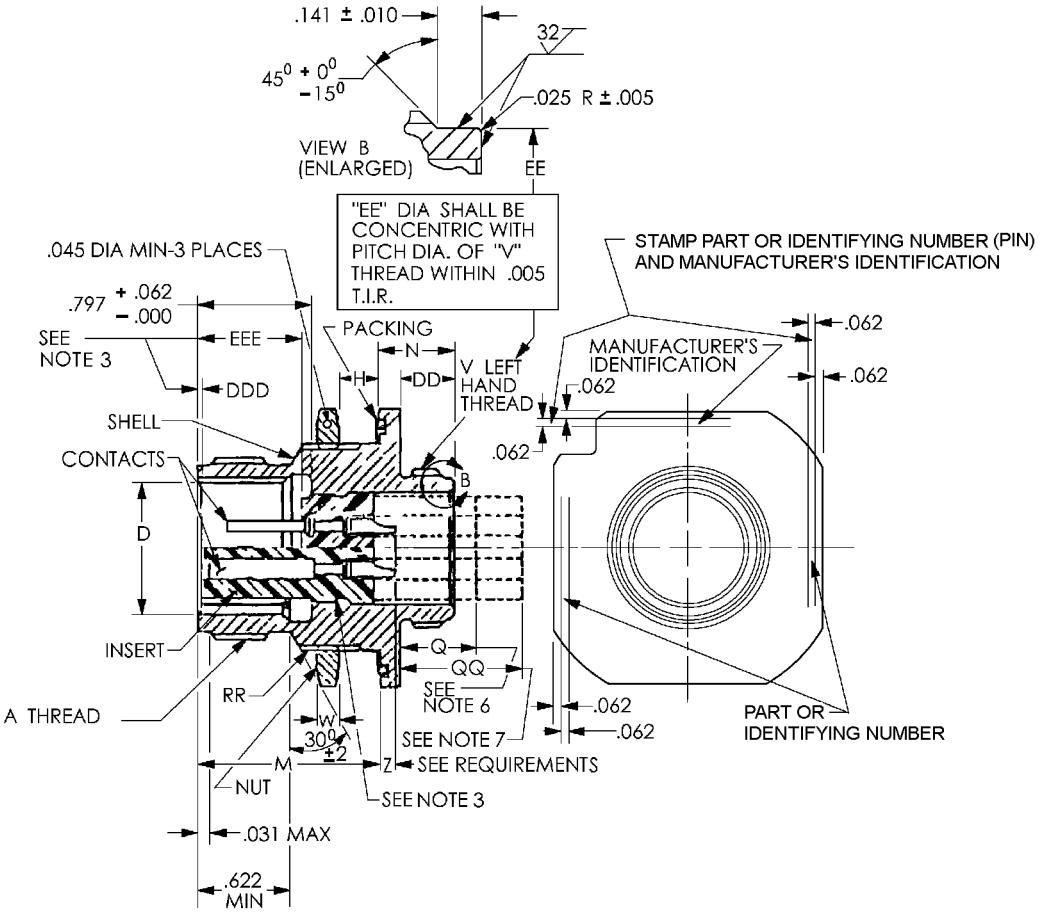

FIGURE 1. Dimensions and configuration.

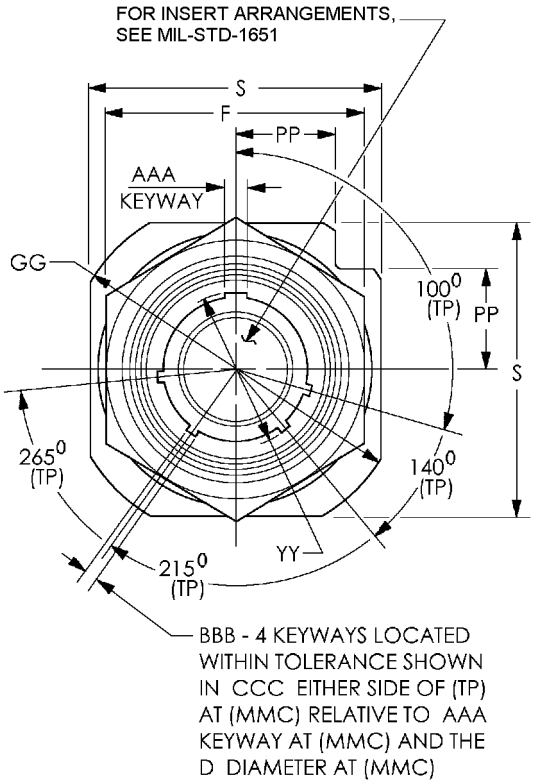

FIGURE 1. Dimensions and configuration – Continued.

Shell size	A Thread (plated) class 2A	D dia + .005 - .010	F hex + .017 - .016	H Panel thickness	
				min	max
12	0.8750-0.1P-0.2L-DS	.567	1.250	.094	.188
14	1.0000-0 1P-0.2L-DS	.692	1.312	.094	.188
16	1.1250-0 1P-0.2L-DS	.817	1.500	.094	.188
18	1.2500-0.1P-0.2L-DS	.942	1.562	.094	.203
20	1.3750-0.1P-0.2L-DS	1.068	1.750	.094	.203
22	1.5000-0.1P-0.2L-DS	1.192	1.875	.094	.203
24	1.7500-0.1P-0.2L-DS	1.317	2.125	.094	.265
28	2.0000-0.1P-0.2L-DS	1.536	2.375	.094	.277
32	2.2500-0.1P-0.2L-DS	1.786	2.625	.094	.215
36	2.5000-0.1P-0.2L-DS	2.005	2.875	.094	.215
40	2.7500-0.1P-0.2L-DS	2.255	3.125	.094	.215
44	3.0000-0.1P-0.2L-DS	2.545	3.375	.094	.215

Shell size	M ± .010	N + .021 - .020	Q max	QQ max
12	1.141	.641	.737	---
14	1.141	.641	.737	1.287
16	1.141	.703	.675	1.225
18	1.156	.703	.660	1.210
20	1.156	.703	.660	1.210
22	1.156	.703	.660	1.210
24	1.219	.703	.597	1.147
28	1.231	.785	.503	1.053
32	1.231	.785	.503	1.053
36	1.231	.785	.503	1.053
40	1.231	.972	.503	1.053
44	1.231	.972	NA	NA

FIGURE 1. Dimensions and configuration – Continued.

Shell size	S	V Thread (plated) class 2A-LH	W + .017 - .000	DD	EE dia + .001 - .007
12	1.375	.7500-20 UNEF	.188	.516	.672
14	1.500	.8750-20 UNEF	.188	.516	.797
16	1.750	1.0000-20 UNEF	.188	.516	.922
18	1.875	1.1250-18 NEF	.188	.516	1.040
20	2.000	1.2500-18 NEF	.188	.516	1.164
22	2.125	1.3750-18 NEF	.188	.516	1.289
24	2.375	1.6250-18 NEF	.188	.516	1.539
28	2.625	1.8750-16 UN	.250	.516	1.780
32	2.875	2.0625-16 N	.250	.516	1.967
36	3.125	2.3125-16 N	.250	.516	2.217
40	3.406	2.6250-16 UN	.250	.703	2.530
44	3.656	2.8750-16 UN	.250	.703	2.780

Shell size	RR Thread (plated) class 2A-RH	Packing preformed (see SAE-AS29513)	DDD Socket insert location ± .030	EEE Pin insert location ± .030
12	1.000-20 UNEF	SAE-AS29513-24	.020	.729
14	1.1250-18 NEF	SAE-AS29513-26	.020	.729
16	1.2500-18 NEF	SAE-AS29513-127	.020	.729
18	1.3750-18 NEF	SAE-AS29513-129	.020	.729
20	1.5000-18 NEF	SAE-AS29513-131	.020	.729
22	1.6250-18 NEF	SAE-AS29513-133	.020	.729
24	1.8750-16 UN	SAE-AS29513-137	.020	.729
28	2.1250-16 UN	SAE-AS29513-141	.020	.729
32	2.3750-16 UN	SAE-AS29513-145	.020	.729
36	2.6250-16 UN	SAE-AS29513-149	.020	.729
40	2.8750-16 UN	SAE-AS29513-234	.020	.729
44	3.1250-16 UN	SAE-AS29513-136	.039	.764

FIGURE 1. Dimensions and configuration – Continued.

Shell size	GG dia	PP + .011 - .010	YY dia + .010 - .006	Z max (see requirements)	Z min (contact size 0 only)
12	1.562	.486	.647	.523	Not applicable
14	1.750	.530	.772	.523	
16	2.000	.623	.897	.523	
18	2.125	.663	1.022	.508	
20	2.250	.707	1.148	.508	.582
22	2.500	.751	1.272	.508	
24	2.750	.840	1.473	.455	.519
28	3.000	.928	1.692	.433	.507
32	3.250	1.017	1.942	.433	
36	3.500	1.104	2.161	.433	
40	3.750	1.213	2.411	.433	
44	4.000	1.299	2.692	.656	

Shell size	RR Thread (plated) class 2A-RH	AAA	BBB	CCC
12	1.000-20 UNEF	.226 +.007 / - .001	.063 + .007 / - .001	.0035
14	1.1250-18 NEF	.126 + .007 / - .001	.063 + .007 / - .001	.0035
16	1.2500-18 NEF	.182 + .010 / - .001	.108 + .010 / - .001	.007
18	1.3750-18 NEF	.182 + .010 / - .001	.108 + .010 / - .001	.007
20	1.5000-18 NEF	.182 + .010 / - .001	.108 + .010 / - .001	.007
22	1.6250-18 NEF	.182 + .010 / - .001	.108 + .010 / - .001	.007
24	1.8750-16 UN	.260 + .010 / - .001	.155 + .010 / - .001	.007
28	2.1250-16 UN	.260 + .010 / - .001	.155 + .010 / - .001	.007
32	2.3750-16 UN	.260 + .010 / - .001	.155 + .010 / - .001	.007
36	2.6250-16 UN	.260 + .010 / - .001	.155 + .010 / - .001	.007
40	2.8750-16 UN	.260 + .010 / - .001	.155 + .010 / - .001	.007
44	3.1250-16 UN	.260 + .010 / - .001	.155 + .010 / - .001	.007

FIGURE 1. Dimensions and configuration – Continued.

Inches	mm	Inches	mm	Inches	mm	Inches	mm	Inches	mm
.001	0.03	.445	11.30	.772	19.61	1.287	32.69	2.500	63.50
.0035	0.089	.486	12.34	.785	19.94	1.289	32.74	2.530	64.26
.005	0.13	.503	12.78	.797	20.24	1.299	32.99	2.545	64.64
.006	0.15	.507	12.88	.817	20.75	1.312	33.32	2.625	66.68
.007	0.18	.508	12.90	.840	21.34	1.317	33.45	2.692	68.38
.010	0.25	.516	13.11	.8750	22.225	1.375	34.93	2.750	69.85
.011	0.28	.519	13.18	.897	22.78	1.473	37.41	2.780	70.61
.016	0.40	.523	13.28	.922	23.42	1.500	38.10	2.875	73.03
.017	0.43	.530	13.46	.928	23.57	1.536	39.01	3.000	76.20
.020	0.51	.567	14.40	.942	23.93	1.539	39.09	3.125	79.38
.021	0.53	.582	14.78	.972	24.68	1.562	39.67	3.250	82.55
.025	0.64	.597	15.16	1.000	25.40	1.6250	41.275	3.375	85.72
.030	0.76	.609	15.47	1.017	25.83	1.692	42.98	3.406	86.51
.031	0.79	.622	15.80	1.022	25.96	1.750	44.45	3.500	88.90
.039	0.99	.623	15.82	1.040	26.41	1.780	45.21	3.656	92.86
.045	1.14	.625	15.88	1.053	26.74	1.786	45.36	3.750	95.25
.062	1.57	.641	16.29	1.168	29.67	1.875	47.63	4.000	101.60
.063	1.60	.647	16.43	1.104	28.04	1.9420	49.33		
.094	2.39	.656	16.66	1.1250	28.575	1.967	49.96		
.108	2.74	.660	16.76	1.141	28.98	2.000	50.800		
.126	3.20	.663	16.84	1.147	29.13	2.005	50.927		
.141	3.58	.672	17.06	1.148	29.16	2.0625	52.388		
.155	3.94	.675	17.15	1.156	29.36	2.125	53.98		
.182	4.62	.688	17.48	1.164	29.57	2.161	54.89		
.188	4.78	.692	17.58	1.192	30.28	2.217	56.31		
.203	5.16	.703	17.86	1.210	30.73	2.500	57.150		
.215	5.46	.707	17.96	1.213	30.81	2.250	57.15		
.250	6.35	.729	18.52	1.219	31.96	2.255	57.28		
.260	6.60	.737	18.72	1.225	31.12	2.3125	58.737		
.265	6.73	.7500	19.050	1.231	31.27	2.3750	60.325		
.277	7.04	.751	19.08	1.250	31.75	2.375	60.33		
.433	11.00	.764	19.41	1.272	32.31	2.411	61.24		

NOTES:

1. All dimensions are in inches. Metric equivalents are given for information only.
2. Unless otherwise specified tolerances are ± .016 (0.41mm).
3. Dimensions shall be maintained when inserts are pressed firmly against indicated shoulder.
4. The part number shall include the class, shell size, finish, insert arrangement, contact style (P or S) and alternate position as shown in the example below.
5. For protective cover, see MS17349.
6. Maximum termination of grommet extension for sizes 12 and 16 contacts for class J.
7. Maximum termination of grommet extension for sizes 0, 4, and 8 contacts for class J.

FIGURE 1. Dimensions and configuration – Continued.

.

REQUIREMENTS:

Design and construction: See figure 1.

Dimension are in inches. Metric equivalents are given for information only. Unless otherwise specified, tolerance is ± .016 (0.41 mm).

Mates with plugs shown on MS17344.

For size 0 contacts only: Increase Z dimension by .312 (7.92 mm) for shell sizes 12 through 40, and increase Z dimension by .062 (1.57 mm) for shell size 44.

For shell size, insert arrangement, alternate position, contact size, spacing and service rating, see MIL-STD-1651.

Shell and jam nut finish: See MIL-DTL-22992.

Class shall be designated by the letter C (pressurized), J (pressurized with grommet) or R (environmental resisting).

Part or Identifying Number (PIN) example:

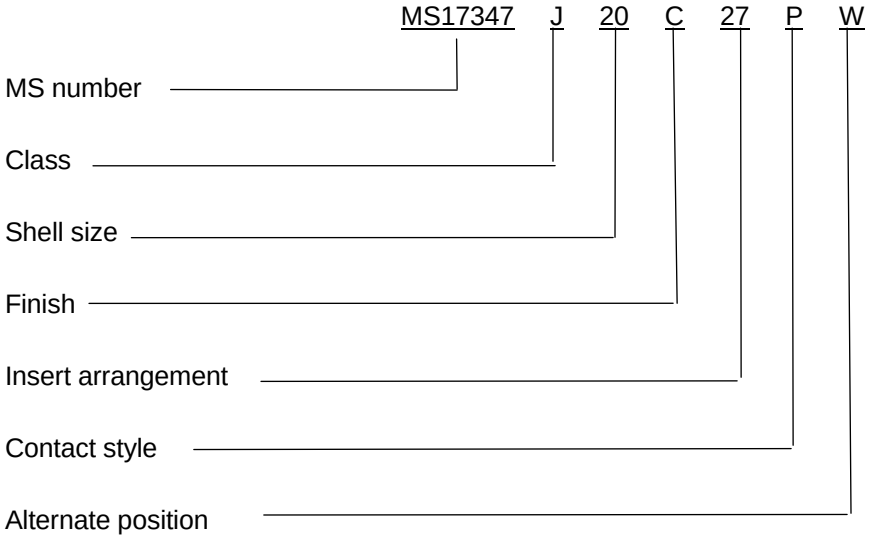

Changes from previous issue. Marginal notations are not used in this revision to identify changes with respect to the previous issue due to the extent of the changes.

Referenced documents. In addition to MIL-DTL-22992, this document references the following:

MS17344
MS17349
MIL-STD-1651
SAE-AS29513

CONCLUDING MATERIAL

Custodians:
Army – CR
Navy – EC
Air Force – 85
DLA – CC

Preparing activity:
DLA – CC

Review activities:
Army – AR, MI
Navy – AS, CG, MC, OS, YD
Air Force – 19

(Project 5935–2012-184)

NOTE: The activities listed above were interested in this document as of the date of this document. Since organizations and responsibilities can change, you should verify the currency of the information above using the ASSIST Online database at https://assist.dla.mil.