INCH-POUND

MIL-DTL-22992H
28 December 2015
SUPERSEDING
MIL-DTL-22992G
2 February 2009

DETAIL SPECIFICATION

CONNECTORS, PLUGS AND RECEPTACLES, ELECTRICAL, WATERPROOF, QUICK DISCONNECT, HEAVY DUTY TYPE, GENERAL SPECIFICATION FOR

This specification is approved for use by all Departments and Agencies of the Department of Defense.

1. SCOPE

1.1 Scope. This specification covers multi-contact, heavy duty, quick disconnect, waterproof, electrical plug and receptacle connectors and associated accessories for electronic and electrical power and control circuits. Connectors are rated for temperatures between -55°C to +125°C. See 6.1 for intended use and applications.

1.1.1 Part or Identifying Number (PIN) construction. Unless otherwise specified in the detail specification sheet, PINs for products acquired to this specification are formatted as shown in the following PIN examples:

a. PIN example for classes C, J and R (see 3.37):

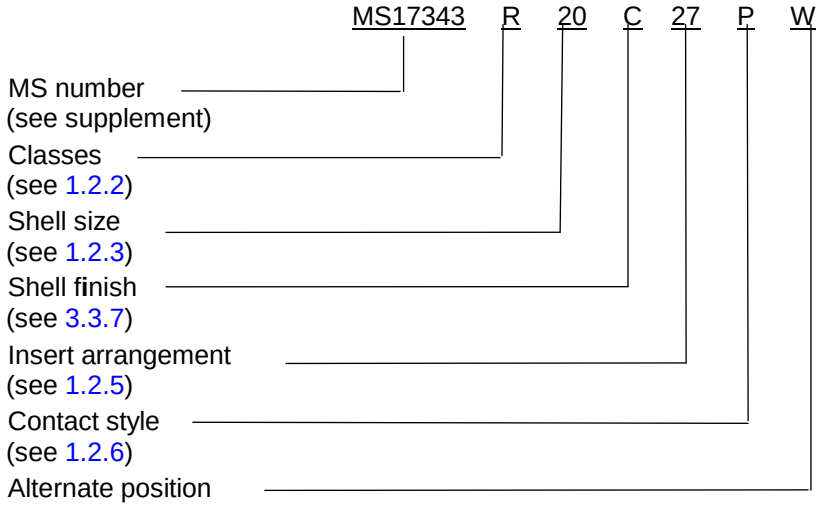

Comments, suggestions, or questions on this document should be addressed to DLA Land and Maritime - VAI, P.O. Box 3990, Columbus OH 43218-3990 or emailed to CircularConnector@dla.mil. Since contact information can change, you may want to verify the currency of this address information using the ASSIST Online database at https://assist.dla.mil.

b. PIN example for class L (see 3.37):

MS90555 N 32 N 08 S W

MS number

Shell finish
(C (conductive) for AC circuits and
N (nonconductive) for DC circuits.)

Shell size

Master key/keyway position
(N designates normal position. A key/keyway designator of 1, 4, 5 or 6 prevents cross-mating of incompatible voltages.)

Insert arrangement
(two digits)

Contact style
(MS90555 and MS90557 are S (socket) style only.
MS90556 and MS90558 are P (pin) style only.)

Alternate insert rotation
(For the 0° position of the insert, or normal position, no letter designator is marked on the part, and no letter designator is included in the PIN. A letter designator is required for all other alternate insert rotations. These alternate rotations are used to prevent cross-mating of incompatible frequencies.)

1.2 Classification. Electrical connectors and accessories are of the following types, classes, sizes, styles and insert arrangements, as specified (see 3.1).

1.2.1 Types.

1.2.1.1 Plugs.

a. Cable connecting plug (without coupling ring).
b. Straight plug.

1.2.1.2 Receptacles.

a. Wall mounting receptacle.
b. Box mounting receptacle.
c. Jam nut receptacle.
d. Jam nut receptacle (box).
e. Wall mounting receptacle (with coupling ring - class L only).

1.2.1.3 Accessories.

a. Cover, protective, receptacle (types A and B).
b. Cover, protective, plug.
c. Receptacle, dummy stowage.
d. Adapter, straight thru, cable sealing
   Style 1 (types A and B)
   Style 2 (types A and B).
e. Adapter, step down, cable sealing
   Style 1 (types A and B)
   Style 2 (types A and B).
f. Adapter, step up, cable sealing
   Style 1 (types A and B)
   Style 2 (types A and B).

1.2.2 Classes.

Class C - Pressurized.
Class J - Pressurized with grommet.
Class L - Arc quenching (see 6.3.1 and Appendix A).
Class R - Environment resisting.

1.2.3 Finishes.

Finish C - Cadmium, conductive, olive drab.
Finish N - Hard oxide, nonconductive, gray/black.
Finish P - Pure dense electrodeposited aluminum, conductive, nonreflective.
Finish T - Nickel fluorocarbon polymer, conductive, nonreflective.
Finish Z - Zinc nickel, conductive, nonreflective.

1.2.4 Sizes. Connector and accessory sizes are as specified (see 3.1).

1.2.5 Insert arrangements, connectors. Insert arrangements are as specified (see 3.1).

1.2.6 Styles.

Style P - Inserts containing pin contacts.
Style S - Inserts containing socket contacts.

2. APPLICABLE DOCUMENTS

2.1 General. The documents listed in this section are specified in sections 3 and 4 of this specification. This section does not include documents cited in other sections of this specification or recommended for addition information or as examples. While every effort has been made to ensure the completeness of this list, document users are cautioned that they must meet all specified requirements documents cited in sections 3 and 4 of this specification, whether or not they are listed.

2.2 Government documents.

2.2.1 Specifications, standards, and handbooks. The following specifications, standards, and handbooks form a part of this document to the extent specified herein. Unless otherwise specified, the issues of these documents are those cited in the solicitation or contract.

FEDERAL STANDARD

FED-STD-H28	-	Screw-Thread Standards for Federal Services.

DEPARTMENT OF DEFENSE SPECIFICATIONS

MIL-DTL-915	-	Cable, Electrical, For Shipboard Use, General Specification for.
MIL-DTL-3432	-	Cable Power and Special Purpose, Electrical (300 and 600 Volts).
MIL-PRF-5606	-	Hydraulic Fluid, Petroleum Base, Aircraft, Missile, and Ordnance.
MIL-S-7742	-	Screw Threads, Standard, Optimum Selected Series, General Specification for.
MIL-DTL-13777	-	Cable, Special Purposes, Electrical, General Specification for.
MIL-DTL-14072	-	Finishes for Ground Based Electronic Equipment.
MIL-PRF-23699	-	Lubricating Oil, Aircraft Turbine Engine, Synthetic Base, NATO Code Numbers O-152, O-154, O-156, and O-167.
MIL-PRF-23827	-	Grease, Aircraft and Instrument, Gear and Actuator Screw.
MIL-I-81969/27	-	Installing and Removal Tools, Connector Electrical Contact, Type II, Class 1, Composition A.
MIL-DTL-83488	-	Coating, Aluminum, High Purity.

(See supplement 1 for list of specification sheets.)

DEPARTMENT OF DEFENSE STANDARDS

MIL-STD-202	-	Electronic and Electrical Component Parts.
MIL-STD-790	-	Established Reliability and High Reliability Qualified Products List (QPL) Systems for Electrical, Electronic, and Fiber Optic Parts Specifications.
MIL-STD-810	-	Environmental Engineering Considerations and Laboratory Tests.
MIL-STD-889	-	Dissimilar Metals.
MIL-STD-1285	-	Marking of Electrical and Electronic Parts.
MIL-STD-1373	-	Screw-thread, Modified, 60 Degrees Stub, Double.
MIL-STD-1651	-	Insert Arrangements for SAE-AS50151, MIL-DTL-22992 (Classes C, J and R), MIL-DTL-83723 (Series II), and SAE-AS95234 Circular Electrical Connectors.

(Copies of these documents are available online at http://quicksearch.dla.mil .)

2.3 Non-Government publications. The following documents form a part of this specification to the extent specified herein. Unless otherwise specified, the issues of the document are these documents are those cited in the solicitation or contract (see 6.2).

ASTM INTERNATIONAL

ASTM A342/A342M	-	Materials, Feebly Magnetic, Permeability of, Standard Test Methods for.
ASTM B700	-	Electrodeposited Coatings of Silver for Engineering Use.
ASTM B841	-	Electrodeposited Coating for Zinc Nickel Alloy Deposits.
ASTM D2000	-	Rubber Products in Automotive Applications.

(Copies of these documents are available at http://www.astm.org.)

ELECTRONIC COMPONENTS INDUSTRY ASSOCIATION (ECIA)

EIA-364	-	Electrical Connector/Socket Test Procedures Including Environment Classifications.
EIA-364-06	-	Contact Resistance Test Procedure for Electrical Connectors.
EIA-364-20	-	Withstanding Voltage Test Procedure for Electrical Connectors, Sockets and Coaxial Contacts.
EIA/ECA-364-21	-	Insulation Resistance Test Procedure for Electrical Connectors, Sockets, and Coaxial Contacts.
EIA/ECA-364-25	-	Probe Damage Procedure for Electrical Connectors.
EIA/ECA-364-26	-	Salt Spray Test Procedure for Electrical Connectors, Contacts and Sockets.
EIA-364-28	-	Vibration Test Procedure for Electrical Connectors and Sockets.
EIA-364-32	-	Thermal Shock (Temperature Cycling) Test Procedure for Electrical Connectors and Sockets.
EIA/ECA-364-83	-	Shell-to-Shell and Shell-to-Bulkhead Resistance Test Procedure for Electrical Connectors.

(Copies of these documents are available online at http://eciaonline.org.)

INTERNATIONAL ORGANIZATION FOR STANDARDIZATION (ISO)

ISO/IEC 17025	–	General Requirements for the Competence of Testing and Calibration Laboratories.

(Copies of this document are available online at http://www.iso.ch or http://webstore.ansi.org/.)

NSCL INTERNATIONAL

NCSL Z540.3	-	Requirements for the Calibration of Measuring and Test Equipment.

(Copies of this document are available online at http://www.ncsli.org.)

SAE INTERNATIONAL

SAE-AMS-QQ-P-416	-	Plating, Cadmium (Electrodeposited).
SAE-AMS-QQ-N-290	-	Nickel Plating (Electrodeposited).
SAE-AMS2404	-	Nickel, Electroless, Plating.
SAE-AMS4027	-	Aluminum Alloy, Sheet and Plate, 1.0MG - 0.60SI - 0.28CU - 0.20CR, (6061; -T6 Sheet, - T651 Plate) Solution and Precipitation Heat Treated.
SAE-AMS2454	-	Plating, Electroless Nickel, Codeposited with Polytetrafluoroethylene (PTFE).
SAE-AS31971	-	Pin, Gage, for Socket Contact Engagement Test.
SAE-AS39029	-	Contacts, Electrical Connector, General Specification for.
SAE-AS39029/48	-	Contacts, Electrical Connector, Pin, Crimp Removable, (for MIL-C-22992 Class L Connectors).
SAE-AS39029/49	-	Contacts, Electrical Connector, Socket, Crimp Removable, (for MIL-C-22992 Class L Connectors).
SAE-AS39029/112	-	Electrical Connector, Contact Bushing, Wire Barrel.
SAE-AS85049/3	-	Connector Accessories, Electrical, Backshell, Cable Sealing, Straight, Category 1A (for MIL-C-22992 Connectors, Classes C, J, and R).

SAE-AS85049/4	-	Connector Accessories, Electrical, Backshell, Cable Sealing, Straight, Step-Up, Category 1A (for MIL-C-22992 Connectors, Classes C, J and R).
SAE-AS85049/5	-	Connector Accessories, Electrical, Backshell, Cable Sealing, Straight, Step-Down, Category 1A (for MIL-C-22992 Connectors, Classes C, J, and R).
SAE-AS85049/59	-	Connector Accessories, Electrical, Adapter, Shrink Boot, Category 5 (for MIL-C-22992 Connectors, Classes C, J, and R).
SAE-EIA557	-	Statistical Process Control Systems.

(Copies of these documents are available at http://standards.sae.org.)

2.4 Order of precedence. Unless otherwise noted herein or in the contract, in the event of a conflict between the text of this document and the references cited herein (except for related specification sheets), the text of this document takes precedence. Nothing in this document, however, supersedes applicable laws and regulations unless a specific exemption has been obtained.

3. REQUIREMENTS

3.1 Specification sheets. The individual item requirements shall be as specified herein and in accordance with the applicable specification sheet. In the event of any conflict between the requirements of this specification and the specification sheet, the latter shall govern.

3.2 Qualification and Qualified Product List (QPL) system. The connectors, adapters, protective covers, and stowage receptacles furnished under this specification shall be products that are authorized by the qualifying activity for listing on the applicable qualified product list before contract award (see 6.4). The manufacturer shall establish and maintain a quality system that allows its parts that are covered by this specification to be listed on the QPL. Following qualification, if the manufacturer seeks to make design changes or process changes to qualified product, or if the manufacturer seeks to use alternate / substitute materials, then the manufacturer shall coordinate with the qualifying activity and obtain its approval for proposed changes prior to implementing design or process changes to qualified product.

3.2.1 Quality.

3.2.1.1 Statistical process control (SPC). The contractor shall implement and use SPC techniques in the manufacturing process for parts covered by this specification. The SPC program shall be developed and maintained in accordance with SAE-EIA557. The SPC program shall be documented and maintained as part of the overall reliability assurance program as specified in MIL-STD-790.

3.3 Materials. The materials shall be as specified herein. However, when a definite material is not specified, a material shall be used which will enable the connectors and accessories to meet the performance requirements of this specification. Acceptance or approval of any constituent material shall not be construed as a guaranty of the acceptance of the finished product.

3.3.1 Nonmagnetic materials. All component parts shall be made from materials which are classed as nonmagnetic (see 3.5).

3.3.2 Dissimilar metals and compatible couples. When dissimilar metals are used in intimate contact with each other, protection against galvanic corrosion shall be provided. The use of dissimilar metals in contact, which tend toward active galvanic corrosion (particularly brass, copper, or steel used in contact with aluminum or aluminum alloy) is not acceptable. However, metal plating of dissimilar base metals to provide similar or suitable abutting surfaces is permitted. The use of dissimilar metals separated by a suitable insulating material is also permitted. Dissimilar metals and compatible couples are defined in MIL-STD-889.

3.3.3 Shells and associated hardware. Shells, covers, coupling rings, stowage receptacles, and cable sealing adapters shall be fabricated from high grade aluminum alloys.

3.3.4 Insert materials.

3.3.4.1 Resilient insert materials (classes C, J, and R). Resilient inserts shall be molded of a suitable dielectric material and shall conform to ASTM D2000. The durometer hardness number shall be from 70 to 90.

3.3.4.2 Plastic insert materials (class L). Plastic inserts shall be fabricated from a plastic dielectric and shall be capable of meeting the performance requirements of the class L connectors.

3.3.5 Contacts.

3.3.5.1 Contacts for classes C and R. Contact basis material (except thermocouple contacts) shall be made of a suitable conductive copper alloy. Accessory members of the socket contact may be made of a suitable corrosion resistant material. Thermocouple contacts shall be made of suitable thermocouple combinations as required.

3.3.5.2 Contacts for class L. Standard class L contacts furnished with connectors under this specification shall be qualified in accordance with SAE-AS39029 and listed on the associated Qualified Product List before contract award.

3.3.6 Grommets and seals. Grommets and seals shall be made of materials conforming to the applicable requirements of ASTM D2000 and as specified (see 3.1).

3.3.7 Finish.

3.3.7.1 Connectors and accessories. Connectors, cable sealing adapters, protective covers and stowage receptacles shall be finished with an electrically conductive or electrically nonconductive finish as specified (see 3.1).

3.3.7.1.1 Conductive finishes, (classes C, J, R, and also class L, ac only). The conductive finish on shells and accessory hardware shall be in accordance with the following designations:

C - The conductive finish shall be nickel plated in accordance with SAE-AMS-QQ-N-290 or SAE-AMS2404 to a thickness of .0002 inch (0.0051 mm) minimum, followed by cadmium plate in accordance with type II of SAE-AMS-QQ-P-416 to a thickness of .0001 inch (0.00254 mm) minimum. The resulting finish shall be olive drab (light to dark) in color and shall be electrically conductive. Components of corrosion resistant materials need not be plated.

P - Pure dense electrodeposited aluminum in accordance with MIL-DTL-83488, Type II. Color shall be nonreflective and electrically conductive.

T - Nickel with fluorocarbon polymer additives conforming to SAE-AMS2454 over a suitable underplate. Color shall be nonreflective and electrically conductive.

Z - Zinc nickel in accordance with ASTM B841, type D (black) over a suitable underplate. Color shall be nonreflective and electrically conductive.

3.3.7.1.2 Nonconductive finish (code designation N) (classes C, J, R, and also class L, 28 Vdc only). The nonconductive finish shall be a hard, oxide coating conforming to finish E514 of MIL-DTL-14072. The resulting finish shall be from gray to black in color and shall be electrically nonconductive. Thickness of the coating shall be approximately .001 inch (0.0254 mm). Components of corrosion resistant materials need not be coated.

3.3.8 Contact plating.

3.3.8.1 Copper alloy contacts, classes C, J, and R. All contacts shall be silver plated to a thickness of .0002 inch (0.0051 mm) minimum in accordance with ASTM B700. Size 8 and larger contacts are to be nickel underplated .00005 inch (0.00127 mm) minimum in accordance with SAE-AMS-QQ-N-290.

3.3.8.2 Thermocouple contact. Thermocouple contacts, except alumel and chromel, shall be cadmium plated in accordance with SAE-AMS-QQ-P-416 or otherwise suitably protected from corrosion. Accessory members of the socket contacts (spring members, etc), as applicable, shall be of corrosion resistant material or suitably protected from corrosion.

3.3.8.3 Class L. Plating of contacts for class L connectors shall be in accordance with SAE-AS39029.

3.3.9 Fungus-resistant. Materials used in the construction of these connectors shall be fungus inert (see 4.2.2).

3.3.10 Pure tin. The use of pure tin, as an underplate or final finish, is prohibited both internally and externally. Tin content of connectors, their components and solder shall not exceed 97 percent, by mass. Tin shall be alloyed with a minimum of 3 percent lead, by mass (see 6.10).

3.3.11 Recycled, recovered, environmentally preferable, or biobased materials. Recycled, recovered, environmentally preferable, or biobased materials should be used to the maximum extent possible, provided that the material meets or exceeds the operational and maintenance requirements, and promotes economically advantageous life cycle costs.

3.4 Design and construction. Connectors, adapters, protective covers and stowage receptacles shall be designed and constructed as specified (see 3.1).

3.4.1 Contact design. Contact design shall be such that neither the pins nor the sockets installed in the connector will be damaged by any possible twisting or forcing during the process of mating.

3.4.1.1 Pin engaging end (classes C, J, and R). The entering end of pins shall be formed with a spherical radius approximately one-half the diameter of the pin, allowing for a flat in the center of the spherical development. The diameter of the blunt end shall be in accordance with dimension K as shown in figure 1. Position of pin engaging end shall be in accordance with dimension H as shown on figure 1.

3.4.1.2 Socket engaging end. The entering end of the socket contact shall be rounded or chamfered to allow for directing and centering of the entering pin. The socket contact shall provide the spring action for maintaining the contacting pressure between the pin and socket.

3.4.1.2.1 Classes C, J and R. Size 12 and smaller socket contacts shall be designed to exclude the entrance of a pin .005 inch (0.127 mm) larger than the allowable maximum diameter of a mating pin. The point of spring engagement of the socket contact with a nominal diameter mating square ended test pin shall not exceed the values shown in column J, (see figure 1) when measured from the end of the shell.

3.4.1.2.2 Class L. The point of spring engagement of the socket contact with a nominal diameter mating square ended test pin shall not exceed the values shown on the applicable defense standard (see 3.1), when measured from the end of the shell.

3.4.1.3 Solder cups (classes C, J, and R). The location of the solder cup shall be such that normal soldering operations shall not impair any part of the assembly. The solder cup shall be as indicated in figure 1 and the applicable specification sheet (see 3.1). All solder cavities shall be designed so that liquid solder will not escape during normal soldering operations and interfere with the float of the contact, and constructed so liquid solder in the solder cup cannot leak through to the front of the socket and prevent insertion of the pin.

3.4.1.4 Dimensions. Contact dimensions of class C, J, and R shall be as specified on figure 1. Contact dimensions of class L shall conform to SAE-AS39029/48 or SAE-AS39029/49. The illustrations on figure 1 are for dimensional purposes only and are not intended to indicate design.

3.4.1.5 Contact insertion and removal.

3.4.1.5.1 Classes C, J, and R. Pin and socket contacts, sizes 1/0, 4, and 8 shall be designed so that they can be readily removed from their inserts for soldering to their conductors and readily assembled after the soldered connection has been made. Contact sizes 12 and 16 shall be rigidly mounted in their inserts. Inserts containing non-removable contacts shall not be subject to damage by soldering under an acceptable soldering process.

3.4.1.5.2 Class L. Pin and socket contacts shall be capable of being readily assembled in the connectors after they have been attached to their conductors. They shall also be capable of being removed from the connectors with the aid of removal tools as specified in MIL-I-81969/27. The inserts shall be capable of being disassembled from their shells to allow the removal of the contacts.

3.4.1.6 Contact bushings. When contact bushings are required for insert arrangements as specified in MIL-DTL-22992, appendix A, A.7.1, applicable contact bushings conforming to SAE-AS39029/112 shall be supplied with the contacts.

3.4.2 Insert design and construction. Inserts shall be positively secured with respect to the shell.

3.4.2.1 Classes C, J, and R. Inserts shall be supplied rotated from the normal position, if specified. The degree and direction of rotation shall be as specified (see 3.1). Inserts shall be of voidless construction and shall be non-removable from their shells.

3.4.2.2 Class L. Inserts shall be supplied rotated from the normal position, if specified. The degree of rotation shall be as specified on the specification sheet (see 3.1). The socket inserts shall be of hard faced and limited (closed) entry design. Inserts shall be removable from their shells. However, pin and socket inserts shall not be interchangeable within a connector. The pin insert interface shall be of a resilient material.

3.4.2.3 Insert arrangements. Insert arrangements shall be in accordance with MIL-STD-1651 for classes C, J, and R. Insert arrangements shall be in accordance with MS14054, MS14055, MS14057, or MS90565 for class L connectors as specified (see 3.1) (Insert arrangements utilizing 12S, 14S, and 16S are not applicable).

3.4.2.4 Contact alignment. To facilitate self-alignment of mating contacts, inserts for socket contacts shall be designed so that individual contacts will have an overall side play of .008 (0.203 mm) minimum.

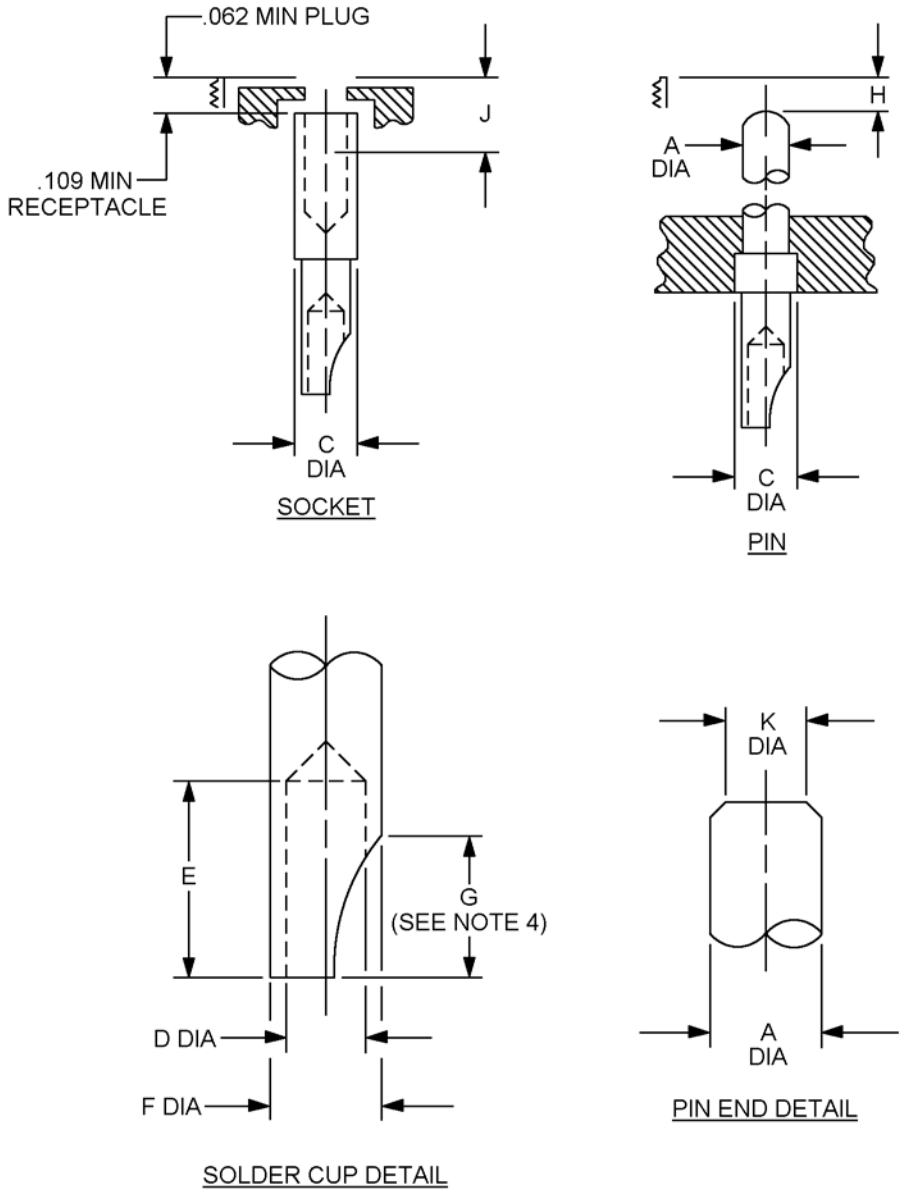

FIGURE 1. Socket and pin, classes C, J and R.

Contact controlled dimensions						
Contact size	A ± .001 (see note 4)	C max	D min	E +.063 - .000	F (see note 5)	
					min	max
16	.0625 (1.59)	.127 (3.23)	.069 (1.75)	.250 (6.35)	.096 (2.44)	.116 (2.95)
12	.094 (2.39)	.190 (4.83)	.112 (2.84)	.375 (9.53)	.130 (3.30)	.150 (3.81)
8	.142 (3.61)	.310 (7.87)	.205 (5.21)	.500 (12.70)	.243 (6.17)	.259 (6.58)
4	.225 (5.72)	.441 (11.20)	.328 (8.33)	.625 (15.88)	.370 (9.40)	.397 (10.08)
0	.357 (9.07)	.597 (15.16)	.464 (11.79)	.625 (15.88)	.510 (12.95)	.550 (13.97)

Contact controlled dimensions							
Contact size	H				J max (see note 6)		K
	Plug		Receptacle				
	min	max	min	max	Plug	Receptacle	
16	.227 (5.77)	.307 (7.80)	.294 (7.47)	.354 (8.99)	.281 (7.14)	.328 (8.33)	.031 max (.79)
12	.062 (1.57)	.132 (3.35)	.109 (2.77)	.179 (4.55)	.375 (9.53)	.422 (10.72)	.062 max (1.57)
8	.062 (1.57)	.132 (3.35)	.109 (2.77)	.179 (4.55)	.375 (9.53)	.422 (10.72)	.083 max (2.11)
4	.062 (1.57)	.132 (3.35)	.109 (2.77)	.179 (4.55)	.375 (9.53)	.422 (10.72)	.100 ± .010 (2.54) (.25)
0	.062 (1.57)	.132 (3.35)	.109 (2.77)	.179 (4.55)	.281 (7.14)	.328 (8.33)	.232 ± .010 (5.89) (.25)

NOTES:
1. Dimensions are in inches.
2. Metric equivalents are given for information only.
3. Metric equivalents (in millimeters) are in parentheses.
4. Dimension A is measured after plating.
5. These values are used for calculating mechanical spacing between contacts and between contacts and shell.
6. Dimension J represents the distance between the end of the shell and the point at which the mating pin engages socket contact spring.
7. G dimension limited to a maximum of 2/3 of E dimension, applicable to size 16 and 12 only. Cutout is optional for sizes 1, 0, 4 and 8.

FIGURE 1. Socket and pin, classes C, J and R - Continued.

3.4.3 Coupling connection. Plugs shall be connected or coupled to their mating receptacle by means of coupling rings. The coupling threads shall be as specified (see 3.1). All coupling rings shall be knurled or fluted.

3.4.3.1 Classes C, J and R. Coupling rings shall be designed so that the pin and socket contacts will fully engage or disengage as the ring is respectively tightened or loosened. The coupling ring shall jack against the adapter during connector unmating. Coupling shall occur in the following sequence: polarization and engagement of shells, engagement of coupling threads, and engagement of contacts. The uncoupling sequence shall be in the reverse order.

3.4.3.2 Class L. The coupling of class L connectors shall occur in the following sequence: Polarization and engagement of the mating shells, engagement of the grounding and neutral contacts, .019 inch (0.483 mm) minimum effective engagement of the phase contacts, and engagement of the coupling threads. The uncoupling sequence shall be in reverse order.

3.4.4 Polarization. Polarization of the plug with its receptacle shall be accomplished by five integral keys on the male connector and matching keyways on the female connector and shall be designed so that it cannot possibly interfere with the functioning of the coupling threads. The integral keys and keyways shall render the mating of the plug and receptacle in more than one position impossible. The mating keys and keyways shall be substantially rectangular in cross section.

3.4.4.1 Class L. Class L shells shall be supplied with the main key (or keyway) rotated from the normal position, as specified (see 3.1). The relationship between the four small minor keys (or keyways) and the centerline through the main key (or keyway) in the nominal position shall remain constant.

3.4.5 Screw threads. Coupling threads of connectors, stowage receptacles and protective covers shall be either 1P- 2L-DS or 1428P-.2857L-DS, class 2A or 2B of MIL-STD-1373, as specified (see 3.1). All adapter threads shall conform to FED-STD-H28 and shall be as specified (see 3.1). Screw threads shall be checked after plating by means of ring and plug gages only, in accordance with FED-STD-H28. Out-of-roundness beyond the tolerances of MIL-S-7742 or MIL-STD-1373 is not objectionable if the threads can be checked without forcing of the thread gages. Screw threads may be relieved provided such relief does not interfere with the proper performance of the screw threads.

3.4.5.1 Lubrication. All class 2B threads shall be coated with a lubricant conforming to MIL-PRF-23827.

3.4.6 Class J connectors. Class J connectors shall be provided with a grommet to support individual conductors and shall be held in position by the appropriate cable sealing adapter (style 2) (see 3.4.8.1).

3.4.7 Class L connectors. Class L grounding connectors shall have all system grounding contacts electrically connected to their shells without interfering with proper engagement or performance of the connectors. All shells and associated hardware of grounding assemblies shall be of the conductive (C) finish, and only key (or keyway) positions 4, 5, or 6 as applicable, shall be used. All shells and hardware of nongrounding assemblies shall have a nonconductive (N) finish.

3.4.8 Accessories.

3.4.8.1 Adapters, cable sealing. Adapters shall be as specified in SAE-AS85049/3, SAE-AS85049/4, SAE-AS85049/5 and SAE-AS85049/59. The adapters shall not seize the coupling ring and shall be designed for bottoming out when assembled to the connector.

3.4.8.1.1 Classes C, J and R. Adapters shall be capable of sealing on cable conforming to MIL-DTL-915 or MIL-DTL-13777 and shall be provided with a permanently attached protective cover.

3.4.8.1.2 Class L. Adapters shall be capable of sealing on cable or wire conforming to MIL-DTL-3432 (see 3.1).

3.4.8.2 Protective covers. Protective covers shall be assembled to the connector as specified in MS17349, MS17350, MS90563, and MS90564.

3.4.8.3 Stowage receptacles. Stowage receptacles shall be as specified in MS18062.

3.4.8.4 Cable sealing gland (class L). Cable sealing glands shall be as specified in MS23747.

3.4.8.5 Cable grip (class L). The cable grip shall be is specified in MS90561.

3.5 Magnetic permeability (mu). When the connector assembly less cable grip or accessory is tested specified in 4.6.2, the relative permeability shall be less than 2.0 μ.

3.6 Shell-to-contact resistance (class L grounding). When connectors are tested in accordance with 4.6.3, the resistance between each grounding contact and the shell shall cause a voltage drop not greater than 10 millivolts.

3.7 Contact resistance. When connectors are tested as specified in 4.6.4, the resistance of mated pin and socket contacts shall be such that the potential drop at the test current specified in table I shall not be greater than the values specified.

3.8 Dielectric withstanding voltage. When connectors are tested as specified in 4.6.5, connectors shall be capable of withstanding the applicable voltages shown in table II without flashover or breakdown.

3.9 Thermal shock (temperature cycling). When connectors ate tested as specified in 4.6.6, connectors and cable sealing adapters shall show no evidence of physical damage.

3.10 Air leakage (class C, J and L connectors and protective covers). When connectors and protective covers are subjected to the air leakage test of 4.6.7, the air leakage rate shall not be greater than 1 atmospheric cubic inch (16.39 cc) of air per hour.

TABLE I. Contact resistance.

Contact size	Test current (amperes) dc class		Potential drop (millivolts, max)	
	C, J, and R	L	Initial (prior to salt spray)	After salt spray
16	20	---	25	35
12	35	---	20	30
8	60	---	12	25
6	---	40	8	18
4	100	---	10	20
4	---	60	8	18
1/0	200	---	10	20
1/0	---	100	9	19
2/0	---	150	10	20
4/0	---	200	11	22

TABLE II. Dielectric withstanding voltage.

Service rating	Sea level test voltage minimum (Vac rms, 60 Hz)
inst.	1,000
A	2,000
D	2,800
E	3,500
B	4,500
C	7,000

3.11 Contact retention. When contacts are tested as specified in 4.6.8, they shall be capable of withstanding the axial loads shown in table III.

TABLE III. Contact retention loads.

Contact size	Minimum axial load
16	10 lbs (4.444 kg)
12	15 lbs (6.665 kg)
8	20 lbs (8.887 kg)
6	20 lbs (8.887 kg)
4	25 lbs (11.109 kg)
1/0	35 lbs (15.553 kg)
2/0	35 lbs (15.553 kg)
4/0	35 lbs (15.553 kg)

3.12 Insert retention. When insert assemblies are tested as specified in 4.6.9, they shall retain their normal position in the connector shell for a minimum of 5 seconds at the pounds force per square inch (lb_f / in^2) pressure specified in table IV.

TABLE IV. Insert retention test pressures.

Size	Gauge pressure
12	150 lb_f / in^2 (10.546 kg/cm^2)
14 through 18	100 lb_f / in^2 (7.031 kg/cm^2)
20 through 22	75 lb_f / in^2 (5.273 kg/cm^2)
24 through 23	60 lb_f / in^2 (4.220 kg/cm^2)
32 through 52	45 lb_f / in^2 (3.164 kg/cm^2)

3.13 Insulation resistance. When connectors are tested as specified in 4.6.10, the insulation resistance (prior to conditioning) shall not be less than 5,000 megohms.

3.14 Humidity. When connectors are tested as specified in 4.6.11, they shall meet the following requirements:

Insulation resistance
- During the 10th cycle - 10 megohms minimum
- After 24-hour drying period - 1,000 megohms minimum
- Dielectric withstanding voltage - As specified in table II

3.15 Durability. Counterpart connectors shall show no mechanical or electrical defects detrimental to the operation of the connector after 100 cycles of coupling and uncoupling in accordance with 4.6.12. The connectors shall be subjected to 50 cycles before and after the corrosion test. No lubricant shall be applied prior to, during, or after the test.

3.16 Salt spray (corrosion). When tested as specified in 4.6.13, there shall not be sufficient corrosion to interfere with the mating of the connectors or accessories. Exposure to salt-laden atmosphere shall not cause corrosion or exposure of the basis metal on any plated metal part such as shells, adapters, coupling rings or the individual pin and socket contacts submitted which is detrimental to their mechanical or electrical performance.

3.17 Cable pull-out. When connectors are tested as specified in 4.6.14, test cables (see 4.4.3) shall not pull-out when the loads given in table V are applied, nor shall slippage exceed .125 inches (3.18 mm).

TABLE V. Cable pull-out test loads.

Weight of cable per 1,000 ft.	Minimum required pull-out force	
	Without cable grip	With cable grip
up to 350 lbs (up to 155.53 kg)	50 lbs (22.22 kg)	75 lbs (33.33 kg)
351 – 725 lbs (155.972 – 322.165 kg)	75 lbs (33.33 kg)	150 lbs (66.66 kg)
726 – 1,000 lbs (322.61 – 444.365 kg)	100 lbs (44.44 kg)	200 lbs (88.88 kg)
over 1,000 lbs (over 444.365 kg)	125 lbs (55.55 kg)	250 lbs (111.10 kg)

3.18 Vibration. When the wired connector assembly is tested as specified in 4.6.15, there shall be no loss of electrical continuity in excess of 10 microseconds, and there shall be no cracking, breaking, or loosening of parts.

3.19 Drop (class L). When connectors are tested as specified in 4.6.16, there shall be no breaking or cracking of inserts, bending of pins nor any other damage which prevents the connectors from being mated or renders them unfit to continue further testing. Any chipping of the insert which affects its polarization or retention in the shell shall be considered a failure.

3.20 High-impact shock. When connectors are tested as specified in 4.6.17, there shall be no evidence of damage or discontinuity of current in excess of 10 microseconds. The connectors or accessories shall not loosen or become disengaged.

3.21 Water immersion. When tested in accordance with 4.6.18, the receptacle inserts and panel seals shall show no leakage. There shall be no evidence of water leakage at the connector interface of mated connectors, nor shall there be evidence of leakage in the cable adapters of the mated or unmated plugs or between the protective caps and the connector interface. At the end of 4 hours while the mated plugs are still immersed, the insulation resistance shall be 100 megohms minimum. After removal of unmated connectors from the immersion tank, the insulation resistance shall be 100 megohm minimum.

3.22 Heat rise (class L). When connectors are tested as specified in 4.6.19, the temperature rise of the individual contact terminals shall be not more than 30°C (54°F) above ambient temperature. There shall be no evidence of physical damage.

3.23 Arc rupture (class L). When connectors are tested as specified in 4.6.20, they shall withstand the test current in table VI. There shall be no electrical or mechanical damage which would prevent the connectors from being fully mated and unmated by hand. Flexible spring members of contacts shall not weld together. Any arc drawn while mating or unmating connectors under maximum load will be extinguished before the pin contact leaves the socket contact insert chambers. Contacts shall maintain shape and there shall be no excessive vaporization of metal or contact distortion. Following the test, the connectors shall meet the following requirements:

Insulation resistance - 100 megohms minimum
Dielectric withstanding voltage - as specified in table II

TABLE VI. Test current for arc rupture (class L only).

Contact	Rated current (amperes) AC	Test current (amperes) AC
6	40	60
4	60	90
1/0	100	150
2/0	150	225
4/0	200	300

3.24 Fluid immersion. When connectors are tested as specified in 4.6.21, they shall mate properly with their counterpart connectors and withstand one-half the applicable voltage stipulated in table II.

3.25 Tensile (protective cover). When the protective covers are tested as specified in 4.6.22, they shall withstand a tensile load of 25 lbs (11.11 kg) minimum.

3.26 Contact engagement and separation forces. When socket contacts are tested as specified in 4.6.23, they shall comply with the contact engagement and separation forces in table VII.

TABLE VII. Contact engagement and separation forces.

Contact size	Force	
	maximum	minimum
16	3.0 lbs (1.333 kg)	.25 lbs (0.111 kg)
12	5.0 lbs (2.222 kg)	.50 lbs (0.222 kg)
8	10.0 lbs (4.444 kg)	.75 lbs (0.333 kg)
6	10.0 lbs (4.444 kg)	.75 lbs (0.333 kg)
4	15.0 lbs (6.665 kg)	1.00 lbs (0.444 kg)
1/0	20.0 lbs (8.887 kg)	2.00 lbs (0.888 kg)
2/0	20.0 lbs (8.887 kg)	2.00 lbs (0.888 kg)
4/0	20.0 lbs (8.887 kg)	2.00 lbs (0.888 kg)

3.27 Probe damage (contacts). When size 16 sockets are tested as specified in 4.6.24, the contact engagement and separation forces shall be 3.0 lbs (1.333 kg) maximum and 0.25 lbs (.111 kg) minimum.

3.28 Abrasion. (see 4.6.25).

3.28.1 Nonconductive finish. Those areas of the test panel which have been subjected to the test specified in 4.6.25.1, shall not show basis metal exposure and shall be dielectric to the extent that .062 inches (1.59 mm) diameter ball contacts, pressed with .110 lbs (50 gram) load against a flat section, shall not pass current with the application of a 6 volt potential. Following the test, salt spray (corrosion) shall meet the requirements of 3.16.

3 28.2 Conductive finish. Those areas of the test panel which have been subjected to the test specified in 4.6.25.2 shall not show basis metal exposure. Following the test, salt spray (corrosion) shall meet the requirements of 3.16.

3.29 Shell-to-shell conductivity (conductive finishes only). When tested as specified in 4.6.26, the probes shall not puncture or otherwise damage the connector finish and the maximum measured potential drop across the assemblies. The voltage drop across the mated connectors shall not be greater than the following for each conductive finish:

Before conditioning: 200 mV
After conditioning: 400 mV

3.30 Marking of inserts. Inserts shall be marked as specified (see 3.1)

3.31 Contact designations. Contacts shall be as specified (see 3.1). Letters shall remain legible upon completion of all tests specified under 4.4.2. Letters shall be either raised or flush and shall be arranged to avoid confusion between contacts. All letters shall appear on the front of each insert and as many as practicable on the rear face. Lettering of socket inserts shall correspond with that of the mating pin insert.

3.32 Marking of contacts (class L). Marking of contacts for class L connectors shall consist of three color bands as specified (see 3.1). The location of the color bands shall be in accordance with the applicable specification sheets as specified (see 3.1).

3.33 Workmanship. Connectors, adapters, protective covers, and stowage receptacles shall be processed in such a manner as to be uniform in quality and shall be free from defects that will affect life, serviceability, or appearance. There shall be no evidence of poor molding or fabricating, damaged or improperly assembled contacts, peeling or chipping of the plating and finish, excessive flash which would indicate improper molding, nicks or burrs to metal surfaces.

3.34 JAN and J marking. The United States Government has adopted and is exercising legitimate control over the certification marks "JAN" and "J", respectively, to indicate that items so marked or identified are manufactured to, and meet all the requirements of specifications. Accordingly, items acquired to, and meeting all of the criteria specified herein and in applicable specifications shall bear the certification mark "JAN" except that items too small to bear the certification mark "JAN" shall bear the letter "J". The "JAN" or "J" shall be placed immediately before the part number except that if such location would place a hardship on the manufacturer in connection with such marking, the "JAN" or "J" may be located on the first line above or below the part number. Items furnished under contracts or orders which either permit or require deviation from the conditions or requirements specified herein or in applicable specifications shall not bear "JAN" or "J". In the event an item fails to meet the requirements of this specification and the applicable specification sheets, the manufacturer shall remove completely the military the part number and the "JAN" or the "J" from the sample tested and also from all items represented by the sample. The "JAN" or "J" certification mark shall not be used on products acquired to contractor drawings or specifications. The United States Government has obtained Certificate of Registration Number 504,860 for the certification mark "JAN" and Registration Number 2,577,735 for the certification mark “J”.

Note: The “JAN” or “J” marking is not part of the part number **(**PIN) but indicates a certification.

3.35 Change effectivity. Unless otherwise specified by the preparing activity and/or the qualifying activity, all changes from the previous revision of MIL-DTL-22992 shall become effective within 90 days from the date of publication of the latest revision. If unable to implement changes within the 90 day time period, additional time shall be requested from the qualifying activity. Manufacturers that are QPL-listed and have concerns regarding possible changes to retention reporting requirements should contact the qualifying activity for clarification.

3.36 Disposition of stock. If connectors and accessories produced to the previous revision continue to meet the requirements of this specification, then products manufactured in accordance with the previous revision may continue to be shipped from stock for an indefinite period. If the qualified products meet the requirements of the previous revision, but do not meet the requirements of the current revision, then the manufacturer and their selling agents or distributors have a period of 18 months from the date of the latest revision to purge or ship all inventory, unless otherwise coordinated with, and authorized by, the qualifying activity.

3.37 Marking. The receptacle and plug connectors and accessories shall be permanently marked with the manufacturer's name or trademark, date code, “JAN” or “J” prefix, and the following information, as applicable (see 3.34 and 1.1.1). Stamping shall be in accordance with MIL-STD-1285 where space permits.

4. VERIFICATION

4.1 Classification of inspections. The inspection requirements specified herein are classified as follows:

a. Qualification inspection (see 4.4).
b. Conformance inspection (see 4.5).

4.2 Test equipment and inspection facilities. Test and measuring equipment and inspection facilities of sufficient accuracy, quality and quantity to permit performance of the required inspection shall be established and maintained by the supplier. The establishment and maintenance of a calibration system to control the accuracy of the measuring and test equipment shall be in accordance with ISO/IEC 17025 and NCSL Z540.3.

4.2.1 Established reliability assurance program. A reliability assurance program shall be established and maintained in accordance with MIL-STD-790. Evidence of such compliance shall be verified by the qualifying activity of this specification as a prerequisite for qualification and continued qualification.

4.2.1.1 Statistical process control (SPC). A SPC program shall be established and maintained in accordance with SAE-EIA557. Evidence of such compliance shall be verified by the qualifying activity as a prerequisite for qualification and retention of qualification.

4.2.2 Fungus resistance certification. Certification to method 508.6 of MIL-STD-810 is required (see 3.3.9).

4.3 Inspection conditions. Unless otherwise specified herein, all inspections shall be performed in accordance with the test conditions specified in the "GENERAL REQUIREMENTS" of EIA-364.

4.4 Qualification inspection (see table VIII). Qualification inspection shall be performed at a laboratory acceptable to the qualifying activity (see 6.4) on sample units produced with equipment and procedures normally used in production.

4.4.1 Qualification samples. Qualification inspection samples shall consist of the following:

a. Two complete mating assemblies of straight plug and wall mounting receptacle, in each size of either class C or class R, having each type finish for which qualification is sought, and containing the greatest complement of contacts for that size. If class R assemblies are provided and additional qualification is desired for class C and (or) class J connectors, then one additional mating assembly of straight plug and wall mounting receptacle in each size of either class C or class J containing the greatest complement of contacts for that size shall be provided. Suitable adapters less protective covers shall also be provided.

b. For class L, two complete mating assemblies consisting of wall mounting receptacles (MS90555) and straight plugs (MS90556) and one complete mating assembly consisting of a cable connecting receptacle without coupling ring (MS90557) and a wall mounting plug with coupling ring (MS90558) having the finish for which qualification is desired, and containing the greatest complement of contacts for that size. If qualification of all class L plugs and receptacles is not sought, then the following quantities are required: Three complete mating assemblies consisting of MS90555 (receptacles) and MS90556 (plugs) with each finish shall be provided if qualification of MS90557 and MS90558 is not desired. Three complete mating assemblies consisting of MS90557 (cable connecting receptacles) and MS90558 (wall mounting plugs) shall be provided if qualification of MS90555 and MS90556 is not desired. In addition, manufacturers that qualify class L

connectors at the 400Hz level, may receive qualification by similarity for 60 Hz and 28Vdc rated connectors. Manufacturers that are only qualifying 28 Vdc and 60 Hz rated connectors shall test both connectors to the 28 Vdc and 60 Hz levels, and shall not receive qualification by similarity for connectors rated at 400 Hz.

c. Connectors or accessories being qualified on the basis of differences from those initially qualified (see 4.4.1.1).

d. Fifty-five socket contacts and five pin contacts of each size.

e. Two panels 4 x 4 x .125 inches (10 x 10 x 3.175 mm) of SAE-AMS4027 aluminum (AA-6061-T6) finished with a conductive coating, representing normal piece part treatment as specified in 3.3.7.1.1 or finished with a nonconductive hard oxide coating representing normal piece part treatment as specified in 3.3.7.1.2 or one of each finish. If qualification is desired for only one type of finish, then only one type panel of the appropriate finish shall be required.

f. For classes C, J and R only, two protective covers with mating connectors in sizes 12, 22 and 40, or two each of the shell sizes for which qualification is desired

g. For classes C, J and R only, one stowage receptacle with mating connector in sizes 12, 22 and 40, or two each of the shell sizes for which qualification is desired.

h. For classes C, J and R only, one complete adapter assembly in each size and style other than that specified in 4.4.1a shall be submitted for evidence of manufacture at the discretion of the qualifying activity.

i. For class L only, two protective covers (one plug cover and one receptacle cover) with mating connectors in each shell size shall be subjected to the tests of group 3 in table VIII. Qualification of MS90561 cable grips shall require the submission of two cable grips and qualified plugs assembled with cable in accordance with 4.4.3. If cable grips are being qualified concurrently with class L connectors, then only one cable grip and connector assembly is required to undergo group 3 testing.

TABLE VIII. Qualification inspection. 1/

Inspection	Requirement paragraph	Test paragraph	Connector assemblies	Cable adapters
Group 1				
Visual and mechanical examination	3.1, 3.3.1 to 3.3.9, 3.4.1 to 3.4.8, 3.30 and 3.33	4.6.1	X	X
Magnetic permeability	3.5	4.6.2	X	
Shell-to-contact resistance grounding	3.6	4.6.3	X	
Shell-to-shell conductivity (conductive finishes only)	3.29	4.6.26	X	
Contact retention (class L)	3.11	4.6.8	X	
Contact resistance	3.7	4.6.4	X	
Dielectric withstanding voltage	3.8	4.6.5	X	
Thermal shock (temperature cycling)	3.9	4.6.6	X	
Air leakage	3.10	4.6.7	X	
Contact retention (classes C, J, R)	3.11	4.6.8	X	
Insert retention	3.12	4.6.9	X	
Insulation resistance	3.13	4.6.10	X	
Humidity	3.14	4.6.11	X	X
Insulation resistance	3.13	4.6.10	X	X
Dielectric withstanding voltage	3.8	4.6.5	X	X
Durability	3.15	4.6.12	X	
Salt spray (corrosion)	3.16	4.6.13	X	X
Shell-to-shell conductivity (conductive finishes only)	3.29	4.6.26	X	
Contact resistance	3.7	4.6.4	X	X
Cable pull-out	3.17	4.6.14	X	X

See footnotes at end of table.

TABLE VIII. Qualification inspection - Continued. 1/

Inspection	Requirement paragraph	Test paragraph	Connector assemblies	Cable adapters
Group 2				
Visual and mechanical examination	3.1, 3.3.1 to 3.3.9, 3.4.1 to 3.4.8, 3.30 and 3.33	4.6.1	X	X
Vibration	3.18	4.6.15	X	X
Drop (class L) 2/	3.19	4.6.16	X	
Dielectric withstanding voltage	3.8	4.6.5	X	
High impact shock 2/	3.20	4.6.17	X	X
Water immersion	3.21	4.6.18	X	X
Insulation resistance	3.13	4.6.10	X	X
Heat rise (class L) 2/	3.22	4.6.19	X	
Arc rupture (class L) 2/	3.23	4.6.20	X	
Dielectric withstanding voltage	3.8	4.6.5	X	
Insulation resistance	3.13	4.6.10	X	
Fluid immersion	3.24	4.6.21	X	X
Shell-to-shell conductivity (conductive finishes only)	3.29	4.6.26	X	
Dielectric withstanding voltage	3.8	4.6.5	X	X

See footnotes at end of table.

TABLE VIII. Qualification inspection - Continued. 1/

Inspection	Requirement paragraph	Test paragraph	Protective covers	Stowage receptacles	Cable grips
Group 3					
Visual and mechanical examination	3.1, 3.3.1 to 3.3.9, 3.4.1 to 3.4.8, 3.30 and 3.33	4.6.1	X	X	X
Magnetic permeability	3.5	4.6.2	X	X	
Water immersion 3/	3.21	4.6.18		X	X
Water immersion (with protective cover)	3.21	4.6.18.4	X		
Insulation resistance	3.13	4.6.10		X	
Salt spray (corrosion)	3.16	4.6.13	X	X	X
Tensile	3.25	4.6.22	X		X
Air leakage 3/	3.10	4.6.7	X		
Cable pullout	3.17	4.6.14			X

See footnotes at end of table.

TABLE VIII. Qualification inspection - Continued. 1/

Inspection	Requirement paragraph	Test paragraph	Separate contacts	Test panels
Group 4				
Contact engagement and separation forces	3.26	4.6.23	X	
Probe damage (contacts size 16 only)	3.27	4.6.24	X	
Contact engagement and separation forces (size 16 only)	3.26	4.6.23	X	
Salt spray (corrosion)	3.16	4.6.13	X	
Contact resistance	3.7	4.6.4	X	
Group 5				
Abrasion	3.28	4.6.25		X
Salt spray (corrosion)	3.16	4.6.13		X

1/ Tests indicated with an “X” are required.
2/ Qualification only.
3/ Not required if performed during group 1 or group 2.

4.4.1.1 Qualification of additional connectors or accessories. For connectors or accessories which differ only in detail from those submitted for qualification, the manufacturer's test report need only provide inspection and test data necessary to validate the differences, with information on identical features for which no inspection or test was performed. Qualification for nongrounding assemblies may be granted by similarity if both abrasion type panels are used in qualification for grounding assemblies. Connectors of a less dense configuration than those listed on the qualified products list may be qualified by similarity provided samples are furnished to the qualifying activity.

4.4.1.2 Qualification of adapters, protective covers, stowage receptacles and cable grips. Manufacturers of adapters, protective covers, stowage receptacles and cable grips, or manufacturers that are not producing mating connectors to this specification, shall submit data substantiating that qualification inspection of those items was performed with an appropriate number of approved electrical connectors as specified in 4.4.1 and in accordance with the applicable requirements of this specification and in the order shown in table VIII.

4.4.2 Inspection routine. Qualification inspection of connectors, adapters, protective covers, cable grips and stowage receptacles shall consist of all the tests of this specification described under test methods of 4.6. The test program shall be as follows and in the order shown in table VIII.

a. Mated connectors shall be subjected to the applicable tests listed in table VIII. Connectors for group 1 need not be wired unless otherwise specified by the individual test method paragraph. Connectors for group 2 shall be wired and sealed. Samples required are as follows:

(1) Class C and R
Group 1 - One pair (either class).
Group 2 - One pair (same class as selected for group 1).

(2) Class L
Group 1 - One pair of MS90555 or MS90556, or as applicable (see 4.4.1b).
Group 2 - One pair of each of the following, or as applicable (see 4.4.1b).

a. MS90555 and MS90556.
b. MS90557 and MS90558.

b. One pair of each of the mated connector assemblies as described in 4.4.1a or 4.4.1b as applicable, shall be subjected to the thermal shock test of 4.6.6 and the air leakage test of 4.6.7.

c. Fifty-five sockets and five pin contacts of each size selected as described in 4.4.1d shall be subjected to the applicable tests listed in group 4 of table VIII, as follows:

(1) Fifty sockets shall be subjected to the test of 4.6.23. Following this test, the size 16 socket contacts shall be subjected to the test of 4.6.24 followed by a retest of 4.6.23.

(2) The remaining five pins and sockets shall be subjected to the tests of 4.6.13 and 4.6.4.

d. One or two panels, as applicable, selected as described in 4.4.1e shall be subjected to the applicable tests listed in group 5 of table VIII.

e. Protective covers, cable grips and stowage receptacles selected as described in 4.4.1f, 4.4.1g and 4.4.1i shall be subjected to the applicable tests in group 3 of table VIII.

4.4.3 Test cables. For the purposes of the tests and when applicable, classes C, J, and R connectors shall be wired with cable conforming to MIL-DTL-915 or MIL-DTL-13777 of construction to match the insert arrangement of the connector, as far as possible. Suitable adapters shall be attached to the connectors to provide effective sealing around the cable when applicable. Solid resilient plugs may be used in lieu of test cables for sealing purposes for group B inspection. Class L receptacles shall be wired with single conductors that are within the limits specified on MS90555 and MS90558. Class L plugs shall be wired with cable conforming to MIL-DTL-3432 as defined on the applicable insert arrangement standard. Use the proper crimp bushings specified in table A-V.

4.4.4 Failures. One or more failures shall be cause for refusal to grant qualification approval.

4.4.5 Retention of qualification. To retain qualification, the manufacturer shall forward a report to the qualifying activity at 12-month intervals for groups A and B, and 36-month intervals for group C. The qualifying activity shall establish the initial reporting date. The qualifying activity, at its option, may shorten the 36 month reporting period to 24 months if deemed necessary. The report shall include the following documentation:

a. A summary of the results of the test performed for inspection of product for delivery (groups A and B), indicating as a minimum the number of lots that have passed and the number that have failed. The results of tests of all reworked lots shall be identified and accounted for.

b. A summary of the results of tests performed for qualification verification inspection (group C), including the number and mode of failures. The summary shall include results of all qualification verification inspection tests performed and completed during the 36-month period. If the summary of the test results indicates nonconformance with specification requirements, and corrective action acceptable to the qualifying activity has not been taken, action may be taken to remove the failing product from the qualified products list.

   Failure to submit the report within thirty (30) days after the end of each reporting period may result in loss of qualification for the product. In addition to the periodic submission of inspection data, the supplier shall immediately notify the qualifying activity at any time during the reporting period that the inspection data indicates failure of the qualified product to meet the requirements of this specification.

   In the event that no production occurred during the reporting period, a report shall be submitted certifying that the company still has the capabilities and facilities necessary to produce the item. If during two (2) consecutive reporting periods there has been no production, the manufacturer may be required, at the discretion of the qualifying activity, to submit a representative product of each type, grade, class, etc. to testing in accordance with the qualification inspection requirements.

4.5 Conformance inspection.

4.5.1 Inspection lot. An inspection lot shall consist of all connectors of the same shell size, covered by the same MS standards, produced under essentially the same conditions, and offered for inspection at one time. In-process controls, unrelated to lot sizes of finished connectors, may be used, provided an inspection method equivalent to the actual testing level is maintained.

4.5.2 Group A inspection. Connectors shall be subjected to the individual tests shown in table IX or group A inspection. The documentation and standard test conditions of EIA-364 do not apply.

TABLE IX. Group A inspection.

Inspection 1/ 2/	Requirement paragraph	Test paragraph
Visual and mechanical examination	3.1, 3.3.1 to 3.3.9, 3.4.1 to 3.4.8	4.6.1

1/ One hundred percent inspection.
2/ The contractor may use in-process controls for this requirement.

4.5.2.1 Visual examination. Each connector shall be visually examined for completeness, workmanship and identification requirements. Attention shall be given to those assemblies that require a gasket to determine the condition of that gasket. Gaskets missing, twisted, buckled, kinked or damaged in any way shall be cause for rejection.

4.5.3 Group B Inspection. Group B inspection shall consist of the applicable tests specified in table X, and shall be made on sample units which have been subjected to and have passed the group A inspection. For group B, the documentation and standard test conditions of EIA-364 do not apply (see 4.5.2.2).

TABLE X. Group B inspection.

Inspection 1/	Requirement paragraph	Test paragraph
Visual and mechanical examination	3.30, 3.32 and 3.36	4.6.1
Contact engagement and separation forces 2/	3.26	4.6.23
Insulation resistance (ambient temperature) 3/	3.13	4.6.10
Dielectric withstanding voltage	3.8	4.6.5

1/ The contractor may use in-process controls for this requirement.
2/ Applicable to class C only.
3/ Test between two adjacent contacts and between two peripheral contacts and the shell.

4.5.3.1 Group B inspection of adapters, protective covers, stowage receptacles and cable grips. Manufacturers of adapters, protective covers, stowage receptacles, and cable grips or manufacturers that are not producing mating connectors shall submit data substantiating that group B tests of those items were performed with an appropriate number of qualified electrical connectors as specified in 4.4.2, and in accordance with the applicable requirements of this specification and in the order shown in table X.

4.5.3.2 Sampling plan. A sample size shall be randomly selected in accordance with table XI. If one or more defects are found, the lot shall be rescreened and defects removed. A new sample as specified in table XI shall then be randomly selected. If one or more defects are found in the second sample lot, the lot shall not be supplied to this specification.

TABLE XI. Sampling plan for group B.

Lot size	Sample size
1 to 13	100 percent
14 to 150	13 units
151 to 280	20 units
281 to 500	29 units
501 to 1200	34 units
1200 to 3200	42 units

4.5.3.3 Lot definition (group B inspection). The production lot definition of MIL-STD-790 is further defined as follows:

a. A production lot consists of all connectors covered under one military specification or standard, manufactured from the specified raw materials, processed under the same specification and procedures, produced by the same type of equipment, and submitted for inspection at one time. Each production lot of assembled connectors shall be a group identified by a common manufacturing record through all significant assembly operations.
b. Traceability of connectors to specific physical/chemical test reports of incoming raw material is not required.
c. Common manufacturing records and traceability shall begin with machining and molding. Traceability shall include connector assembly, if applicable.

4.5.4 Periodic inspection. Periodic qualification verification inspection shall consist of group C. Delivery of products which have passed groups A and B shall not be delayed pending the results of these periodic inspections, except where the results of these inspections show noncompliance with the applicable requirements (see 4.5.3.2).

4.5.4.1 Group C inspection. Group C inspection shall consist of the tests specified in table XII in the order shown. Group C inspection shall be performed every 36 months, which must be accomplished within this period after notification of qualification. Group C inspection shall be made on sample units selected from inspection lots which have passed the groups A and B inspection. The qualifying activity shall reserve the right to shorten the reporting period to 24 months if it is deemed necessary.

4.5.4.1.1 Sampling plan. Every 36 months, mated connector sample units which have passed groups A and B inspections shall be subjected to the tests specified in table XII. Samples shall be selected in sufficient quantity to provide two samples per applicable test group, as determined by the class of the samples to be tested.

4.5.4.1.2 Connector samples. For group C testing, connectors and applicable accessories shall be provided as follows: Separate samples (complete connector assemblies) are required for crimp-contact connectors and solder-contact connectors. Four samples for each class and finish shall be provided. Two samples shall have pin contacts in the plug and socket contacts in the receptacle and shall be wired with approximately 3 ft (91.44 cm) of wire. The other two samples shall have socket contacts in the plug and pin contacts in the receptacle and shall be wired with approximately 3 ft (91.44 cm) of wire. The four samples shall be subjected to the tests specified in table XII in the order shown.

TABLE XII. Group C inspection.

Inspection – class L only	Requirement paragraph	Test paragraph	Group 1	Group 2
Shell-to-contact resistance grounding	3.6	4.6.3	X	
Shell-to-shell conductivity	3.29	4.6.26	X	
Contact retention	3.11	4.6.8	X	
Contact resistance	3.7	4.6.4	X	
Dielectric withstanding voltage	3.8	4.6.5	X	
Thermal shock (temperature cycling)	3.9	4.6.6	X	
Air leakage	3.10	4.6.7	X	
Contact retention	3.11	4.6.8	X	
Insert retention	3.12	4.6.9	X	
Insulation resistance	3.13	4.6.10	X	
Humidity	3.14	4.6.11	X	
Durability	3.15	4.6.12	X	
Salt spray (corrosion)	3.16	4.6.13	X	
Shell-to-shell conductivity (conductive finishes only)	3.29	4.6.26	X	
Cable pull-out	3.17	4.6.14	X	
Vibration	3.18	4.6.15		X
Water immersion	3.21	4.6.18		X
Fluid immersion	3.24	4.6.21		X
Shell-to-shell conductivity (conductive finishes only)	3.29	4.6.26		X

TABLE XII. Group C inspection -Continued.

Inspection - classes R and C only	Requirement paragraph	Test paragraph	Group 1	Group 2	Group 3
Contact retention	3.11	4.6.8	X		
Contact resistance	3.7	4.6.4	X		
Dielectric withstanding voltage	3.8	4.6.5	X		
Shell-to-shell conductivity (conductive finishes only)	3.29	4.6.26	X		
Thermal shock (temperature cycling)	3.9	4.6.6	X		
Air leakage	3.10	4.6.7	X		
Contact retention	3.11	4.6.8	X		
Insert retention	3.12	4.6.9	X		
Insulation resistance	3.13	4.6.10	X		
Humidity	3.14	4.6.11	X		
Durability	3.15	4.6.12	X		
Salt spray (corrosion)	3.16	4.6.13	X		
Shell-to-shell conductivity (conductive finishes only)	3.29	4.6.26	X		
Cable pull-out	3.17	4.6.14	X		
Contact engagement and separation forces	3.26	4.6.23			X
Probe damage (size 16 only)	3.27	4.6.24			X
Contact engagement and separation forces	3.26	4.6.23			X
Salt spray (corrosion)	3.16	4.6.13			X
Contact resistance	3.7	4.6.4			X
Vibration	3.18	4.6.15		X	
Water immersion (mated)	3.21	4.6.18		X	
Water immersion (with protective cover)	3.21	4.6.18.4		X	
Water immersion (unmated)	3.21	4.6.18.2 4.6.18.3		X	
Tensile (chains on covers)	3.25	4.6.22		X	
Fluid immersion	3.24	4.6.21		X	

4.5.4.1.3 Failures. If one or more sample units fail to pass group C inspection, the lot shall be considered to have failed and corrective action shall be taken in accordance with 4.5.4.2.

4.5.4.1.4 Disposition of sample units. Sample units which have been subjected to group C inspection shall not be delivered on the contract or purchase order.

4.5.4.2 Noncompliance. If a sample fails to pass group C inspection, the supplier shall take corrective action on the materials or processes, or both, as warranted, and on all units of product which can be corrected and which were manufactured under essentially the same conditions, with essentially the same materials, processes, etc, and which are considered subject to the same failure. Acceptance of the product shall be discontinued until corrective action, acceptable to the qualifying activity, has been taken. After the corrective action has been taken, group C inspection shall be repeated on additional sample units (all inspections, or the inspection that the original sample failed, at the option of the qualifying activity). Groups A and B inspections may be reinstituted, however, final acceptance shall be withheld until the group C reinspection has shown that the corrective action was successful. In the event of failure after reinspection, information concerning the failure and corrective action shall be furnished to the cognizant inspection activity and the qualifying activity.

4.6 Methods of examination and test.

4.6.1 Visual and mechanical examination. Connectors, adapters, protective covers and stowage receptacles shall be examined to verify that the material, design, construction, physical dimensions, marking and workmanship are in accordance with the applicable requirements (see 3.1, 3.3.1 to 3.3.9 inclusive and 3.4.1 to 3.4.5 inclusive, 3.29 and 3.30).

4.6.2 Magnetic permeability. Permeability of the connectors shall be measured with an instrument conforming to ASTM A342/A342M (see 3.5).

4.6.3 Shell-to-contact resistance (class L grounding). The electrical resistance between grounding contacts and the shell shall be determined by measuring the potential drop from each grounding contact to the shell when carrying a current of 1 ± 0.1 amperes dc. Using the voltmeter-ammeter method, the potential drop shall be measured at the extreme terminal end of the grounding pin or socket and the front of the shell (plug or receptacle) (see 3.6).

4.6.4 Contact resistance. Each pair of mated pin and socket contacts shall be tested after only one mating of the contacts, in accordance with test procedure of EIA-364-06 (see 3.7). The following details and exceptions shall apply:

a. Wire size and type - See 4.4.3.

b. Test current - See table I.

c. Test sample preparation - In addition to the preparation in test procedure 06, the unassembled contacts shall be mated to the minimum depth as determined when the contacts are installed in the appropriate connectors. The potential drop shall be measured at the extreme terminal ends of the contacts. See figure 2 for wiring diagram.

d. Millivolt drop requirements - See table I.

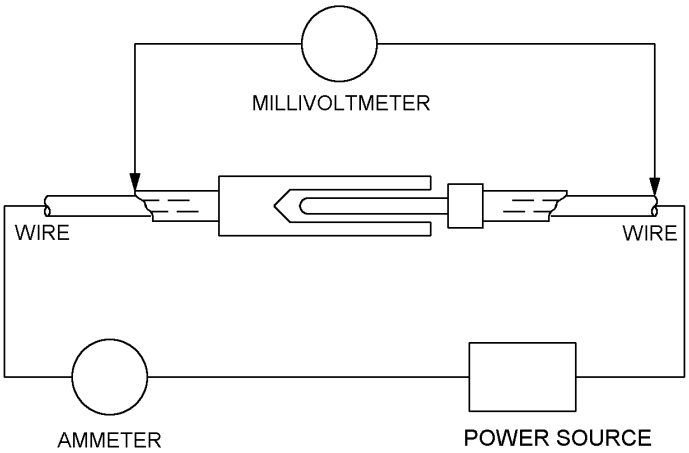

FIGURE 2. Wiring diagram for contact resistance test.

4.6.5 Dielectric withstanding voltage. Unmated connectors shall be tested in accordance with test procedure EIA-364-20 (see 3.8). The following details and exceptions shall apply:

a. Magnitude of test voltage - see table II.

b. Nature of potential – alternating current.

c. Points of application of test voltage - Between the two closest contacts and between the shell and the contacts closest to the shell. Voltage shall not be applied between grounding contacts or grounding contacts and shells of any grounding, class L connectors.

d. Application of test voltage - The test voltages shall be applied gradually at the rate of approximately 300 volts ac per second until the specified voltage is reached.

4.6.6 Thermal shock (temperature cycling). Unmated connectors shall be tested in accordance with test procedure EIA-364-32, condition I, 5 cycles, except that the high temperature shall be 125°C, +3°C / -0°C (see 3.9).

4.6.7 Air leakage (see 3.10).

4.6.7.1 Air leakage (**c**lasses C and J connectors, only). After a minimum of 30 minutes at -55° ± 3° C, classes C and J receptacles shall be subjected to 30 lb_f / in^2 (2.11 kg/cm^2) differential applied alternately to each insert face. The leakage rate shall be measured.

4.6.7.2 Air leakage (class L connectors, only). Class L receptacles shall be mounted to a suitable fixture using the normal mounting method and panel seal. Both class L plugs and receptacles shall be subjected to a pressure differential of 30 lb_f / in^2 (2.11 kg/cm^2) with the pressure applied alternately to each insert face. The leakage rate around the panel seal and through the insert shall be measured.

4.6.7.3 Air leakage (protective covers). The protective covers shall be mated to a connector having either the contacts or inserts removed and a pressure of 15 lb_f/in^2 (21.055 kg/cm^2) shall be applied to the inner side of the protective cover. The leakage rate shall be measured.

4.6.8 Contact retention (see 3.11). Individual contacts shall be subjected to the axial loads specified in table III. The load shall be applied first in one direction then the other, on individual contacts with all other contacts in place and the insert in the shell, uniformly at a rate of approximately 1 pound (.454 kg) per second.

4.6.9 Insert retention (see 3.12). Inserts shall be subjected to the axial load specified in table IV, first in one direction, then the other. Loading shall be accomplished by applying air pressure alternately to each face of the insert. The pressure shall be increased gradually at a rate of approximately 10 lb_f / in^2 (.703 kg/cm^2) per second until the specified pressure in table IV is reached.

4.6.10 Insulation resistance (see 3.13). Mated connectors shall be tested in accordance with test procedure EIA/ECA-364-21. The following details and exceptions shall apply:

a. Points of application of test voltage - Between all adjacent pairs of contacts, but not more than six pair, and between the shell and all adjacent contacts, but not more than six.

b. No measurements shall be made between grounding contacts or between grounding contacts and shell of any grounding class L connector.

4.6.11 Humidity (see 3.14). All cable mounted connectors shall be completely wired and assembled with appropriate accessories in accordance with the directions of the manufacturer. Cable used shall be as specified (see 4.4.3). Class L receptacles shall be wired with suitable single conductor wire. The mated connectors shall be subjected to 10 cycles of exposure in accordance with method 106 of MIL-STD-202, with the exceptions and details listed below:

a. Connectors shall be mounted in a horizontal position with the wires or cables descending into the backshells. There shall be no drip loops in the wires or cables.
b. Wires and cables shall be brought out of the chamber through vapor-tight seals or the ends of the wires/cables shall be effectively sealed.
c. There shall be no wire splices in the chamber.
d. Delete steps 7a and 7b.
e. During steps 1 to 6 inclusive, a polarizing potential of 100 volts dc shall be applied between alternate contacts connected together electrically and the remaining contacts and shell connected together electrically. The polarity of the voltage applied to the shell shall be negative. Voltage shall not be applied to the grounding contacts of class L grounding connectors.
f. After a minimum of 3 hours of step 7 of the tenth cycle, while at the high humidity condition, the connectors shall be subjected to the insulation resistance test of 4.6.10.
g. Following these measurements, the connectors shall be maintained at test conditions of 4.3 for 24 hours maximum. At the conclusion of this recovery period, insulation resistance and dielectric withstanding voltage shall be tested as specified in 4.6.10 and 4.6.5, respectively.

4.6.12 Durability with coupling rings (see 3.15). Counterpart connectors shall be mated and unmated 100 times at a maximum rate of 30 cycles per hour with coupling rings attached. The connectors shall be mated and unmated 50 cycles before corrosion and 50 cycles after corrosion.

4.6.13 Salt spray (corrosion) (see 3.16). Unmated connectors and individual contact samples shall be tested in accordance with test procedure EIA/ECA-364-26, test condition B. The following details and exceptions shall apply:

a. The connectors shall be tested for 452 hours mated followed by 48 hours unmated.

b. The connectors shall not be mounted, but shall be suspended from the top of the chamber using waxed twine or string, glass rods or glass cord.

c. Wire ends shall be protected to prevent salt migration. After the salt spray exposure, the remaining number of durability cycles specified in 4.6.12 shall be completed.

4.6.14 Cable pull-out (see 3.17). Cables assembled in the connector adapter, but with the conductors not attached to the contacts, shall be subjected to the axial tensile load pull-out force specified in table V. The amount of slippage shall be measured between the cable and the connector adapter. The specified load shall be applied for a minimum of 1 hour. When cable grips are an integral part of the adapter or connector assembly, they shall be used.

4.6.15 Vibration (see 3.18). Connectors with suitable adapters shall be tested in accordance with test procedure EIA-364-28. The following details and exceptions shall apply:

a. Test condition number: III.
b. Counterpart plugs shall be engaged with the mounted receptacles and held by normal locking means only. No safety wire shall be used.
c. The vibration of the receptacle and fixture shall be monitored by a suitable sensor at a point or on the fixture near a receptacle support point or on the receptacle itself.
d. All contacts shall be wired in a series circuit with at least 100 milliamperes of current flowing through the series circuit during vibration.
e. The cable or wire bundle shall be clamped to non-vibrating points at least 8 inches from the rear of the connectors. The clamping length may be selected or changed to avoid resonance of the cable or wire.
f. The grounding contacts of class L grounding connectors shall not be wired into the series monitoring circuit.

4.6.16 Drop (class L) (see 3.19) (qualification only). Cabled, unmated line connectors (MS90556 and MS90557) with protective covers assembled shall be tested. Cables shall be inserted through an 84 inch +2 inch / –0 inch (2134 mm +50.8 mm / –0 mm) length of standard commercial conduit or similar tube of sufficient diameter to freely accommodate the cable and shall be taped to the conduit so the connector cable grip is 2 inch +2 inch / –0 inch (50.8 mm +50.8 mm / –0 mm) from the end of the conduit. The other end of the conduit with the cable extending, shall be pivoted at a point 24 inch +1 inch / –0 inch (610 mm +25.4 mm / –0 mm) above the horizontal surface of solid, adequately aged concrete. The pivot shall be capable of rotating 360° and shall not impede or retard the connector's free fall to the striking surface. The connector shall be raised by the cap retention lanyard to a point so that the base of the connector (gland nut) is 72 inch +6 inch / –0 inch (1829 mm +153 mm / –0 mm) above the striking surface and allowed to free fall to the striking surface. The connector shall be dropped 10 times, rotating the connector after each free fall, so that the connector strikes the concrete in each of 10 different radial positions approximately 36° apart. The cable shall then be removed from the conduit, and the shells and inserts shall be examined (see figure 3).

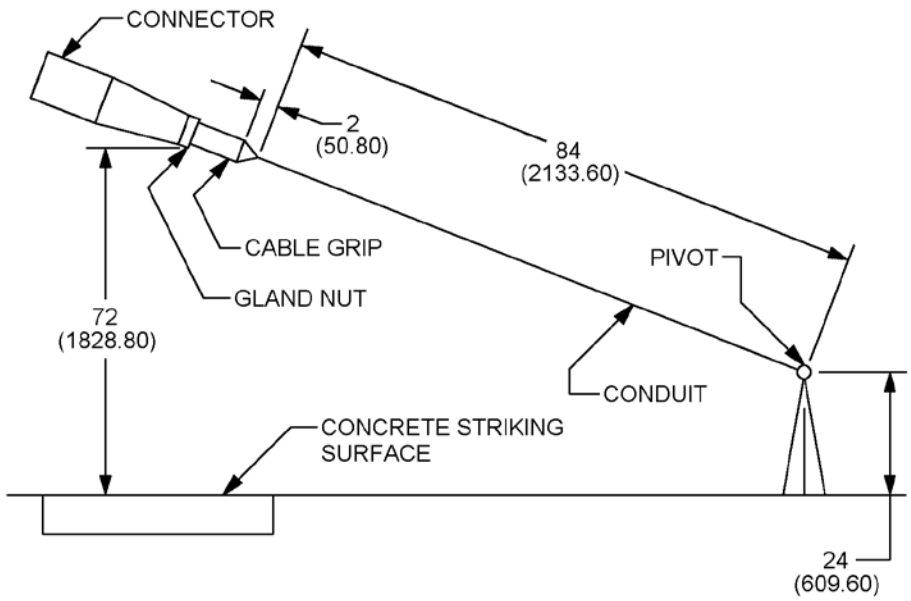

NOTES:
1. Dimensions are in inches.
2. Metric equivalents are given for information only.
3. Metric equivalents are in parentheses.

FIGURE 3. Typical fixture for drop test.

4.6.17 High-impact shock (see 3.20). Complete mated connectors with suitable adapters shall be tested in accordance with method 207 of MIL-STD-202. The following details and exceptions shall apply:

a. Mounting fixtures - In accordance with MIL-STD-202, method 207, standard mounting fixtures for electrical-indicating switchboard meters and other panel-mounted parts.
b. Electrical load and operating conditions - All contacts shall be wired in a series circuit with at least 100 milliamperes of dc current flowing through the series circuit during high-impact shock.
c. Monitoring during test - A suitable device shall be used to monitor the current flow and indicate any discontinuity which exceeds 10 micro-seconds interruption of current flow. The grounding contacts of class L grounding connectors shall not be wired into the series monitoring circuit.
d. The mated connectors shall be held together only by the normal locking device cable or wires shall be supported on a stationary frame not closer than 12 inches (305 mm) from the connector assembly.

4.6.18 Water immersion (mated and unmated) (see 3.21). All connectors shall be completely wired and assembled with appropriate accessories in accordance with the directions on the manufacturer's instruction sheet. Cable and single conductors used shall be in accordance with 4.4.3. Connectors assembled to multiconductor cables shall be tested in a chamber under pressure by submerging in conductive water. Receptacles assembled to single conductor wires shall be mounted to the pressure chamber by their normal mounting means with mounting flange gaskets and their terminal ends external to the chamber containing the conductive water. The water conductivity shall be assured by the addition of at least 5 percent sodium chloride by weight. The cable ends shall be sealed or extended outside the chamber. The tests shall be performed after each of the following conditionings for the classes specified:

a. As received (all classes).
b. After a minimum of 4 hours at -55°C +0°/- 3°C and return to room temperature (classes C and J only).
c. After a minimum of 4 hours at 80°C +3°/- 0° and return to room temperature (all classes).

4.6.18.1 Water immersion, mated (all classes). The chamber shall be at a 1 standard atmosphere pressure differential for a minimum of four hours. While the samples are still submerged and after the chamber has returned to normal pressure, insulation resistance shall be measured as specified in 4.6.10.

4.6.18.2 Water immersion, unmated (class C and J). The chamber shall be at a 1 standard atmosphere pressure differential for a minimum of four hours. After the test samples have been removed from the water, salt deposits may be removed by a gentle wash or dip in running water not warmer than 100°F (37.8°C). Following this, all excess moisture shall be removed and the samples dried with compressed air for 5 minutes. The insulation resistance shall then be measured as specified in 4.6.10.

4.6.18.3 Water immersion, unmated (class L). Connectors shall be tested as specified in 4.6.18.2, except the chamber shall be at a pressure differential equivalent to 6 feet (1829 mm) of water for 4 hours minimum.

4.6.18.4 Water immersion, mated with protective cover. The chamber shall be at a 1 standard atmosphere pressure differential for a minimum of four hours. While the connector samples mated with their protective covers are still submerged and after the chamber has returned to normal pressure, insulation resistance shall be measured as specified in 4.6.10.

4.6.19 Heat rise (class L) (see 3.22). The test shall be performed at 77°F ±9°F (25°C ±5°C) in still air, on mated pairs of connectors with the contacts assembled in the connectors. The contacts shall be wired using suitable stranded copper wire of the same AWG rating as the contacts. All phase and neutral contacts shall be connected in series. All jumpers are to be at least 2 feet (610 mm) long. Thermocouples shall be used to monitor the temperature of the contact terminals. Rated dc current shall be applied through the contacts for a minimum of 4 hours. The temperature of each terminal shall be measured after the 4 hours of loading.

4.6.20 Arc rupture, class L (see 3.23). Connectors, less coupling ring, shall be subjected to 50 continuous cycles of insertion and withdrawals while carrying the test currents specified in table VI.

a. Insertion and withdrawal cycle.

(1) One mating half of the connector pair shall be firmly mounted. The remaining half shall be mounted in a reciprocating (cycling) mechanism and axially aimed with the firmly mounted half.

(2) The cycling mechanism shall mate the receptacle and plug to their normal mating depth. At the initiation of testing and each subsequent cycle, the connector pair shall be mated, and remain mated for 5 seconds minimum. The connector pair shall then be separated at a rate of 10 ±1 inches (254 mm ±25 mm) per second. After separation, the connectors shall be remated at the same speed. One mating and unmating sequence is considered one cycle. The mating and unmating cycle shall be conducted at a rate not to exceed six complete cycles per minute.

b. Electrical load.

(1) For connectors rated at 400 Hz: The sockets shall be connected to a 400 Hz source and the pins to an electrical load.
For connectors rated at 60 Hz: The sockets shall be connected to a 60 Hz source and the pins to an electrical load.

(2) The voltage shall be applied between the neutral contact and the phase contact closest to the neutral contact. When no neutral contact is available, test between two phase contacts.

(3) A steady state inductive load equal to 150 percent of rated current as specified in table VI, at a power factor between 0.75 and 0.80, and at a minimum of 208 volts root mean square (rms), shall be applied using the circuit shown on figure 4. A shunt resistance, in parallel with the inductance, is permissible, provided the current through the resistor does not exceed 1 percent of the total load current. The inductance shall not alter the waveform of the power supply. Following the test, dielectric withstanding voltage and insulation resistance shall be tested as specified in 4.6.5 and 4.6.10, respectively.

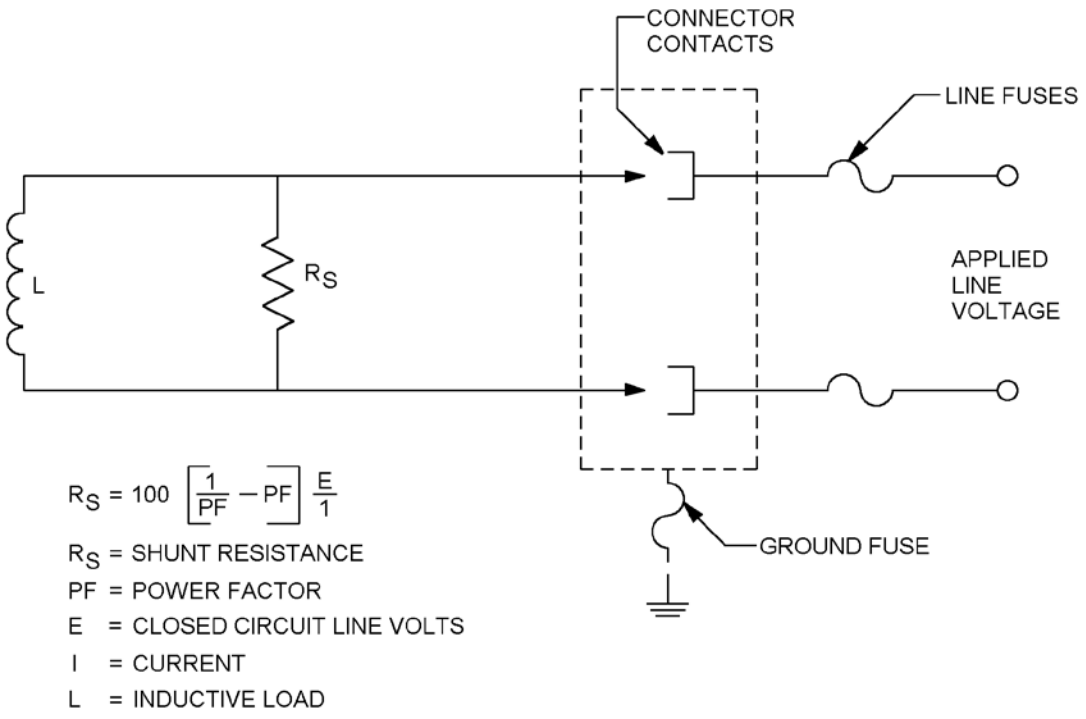

FIGURE 4. Typical circuit for arc rupture.

4.6.21 Fluid immersion (see 3.24). Unmated pairs of connectors from each class shall be immersed fully in each of the fluids specified in table XIII for 20 hours minimum. Upon removal from the fluid, connectors shall be maintained in free air at room temperature for 1 hour minimum. Dielectric withstanding voltage shall then be tested as specified in 4.6.5, except that the magnitude of the test voltage shall meet the requirements of 3.24.

TABLE XIII. Fluids for fluid immersion.

Fluids	Specification
Aviation hydraulic fluid (petroleum base)	MIL-PRF-5606
Aircraft lubricating oil	MIL-PRF-23699

4.6.22 Tensile (protective cover) (see 3.25). Each protective cover shall be securely held and a tensile static load of 25 pounds minimum shall be applied to the end of the chain for at least 5 minutes in each direction as follows:

a. With the axis of the chain at right angles to the axis of the holding rivet.
b. With the axis of the chain in the same axis as that of the rivet.

4.6.23 Contact engagement and separation forces (set 3.26). Sockets shall be mounted in a suitable position or fixture for applying gradually increasing loads for the engagement and separation of test pins. Half of the quantity of socket contacts used in this test shall be installed in inserts, while the remaining socket cavities shall be unpopulated. Depth of engagement shall conform to that encountered in service. The test pins shall be in accordance with SAE-AS31971, except for contact size 2/0 whose diameters shall be a minimum of .4050 +.0001/-.0000 inch (10.3 +.0025/-.0000 mm) and a maximum of .4070 +.0000/- .0001 inch (10.34 +.0000/-.0025 mm). The minimum diameter test pin shall be inserted and removed from the socket and the separation force measured during removal. The maximum diameter test pin shall be inserted and removed from the socket and the engagement force measured during insertion.

4.6.24 Probe damage (contacts, size 16) (see 3.27). Contacts shall be tested as specified in test procedure EIA/ECA-364-25 with the following details and exceptions:

a. A steel test probe of nominal pan contact diameter with a spherical tip shall be inserted into each socket to .500 inch, .375 inch and .250 inch depths, measured from the face of the inserts.
b. A bending moment of 2 inch-pounds ±10% shall be applied about the inserted end and the insert assembly shall be slowly rotated in one direction through 360 degrees.
c. This test shall be applied with the socket contacts in their inserts and the sockets locked, if necessary, to prevent rotation in the inserts.
d. The diameter of the handle (.190) is not applicable.

4.6.25 Abrasion (see 3.28).

4.6.25.1 Abrasion, nonconductive finish (see 3.28.1). Panels specified in 4.4.1e which have been processed with aluminum connector parts, shall be subjected to 50,000 cycles on the TABER abraser, or equivalent. Wheels used on the TABER abraser, or equivalent, shall be CS-I7 with a 1000-gram load on each wheel. Wheels are to be redressed after every 10,000 cycles. Following the abrasion test, salt spray (corrosion) shall be tested as specified in 4.6.13.

4.6.25.2 Abrasion, conductive finish (see 3.28.1). Panels specified in 4.4.1e which have been processed with aluminum connector parts shall be subjected to 5,000 cycles on the TABER abraser or equivalent. Wheels used on the TABER abraser or equivalent shall be CS-17 with 1,000-gram load on each wheel.

4.6.26 Shell-to-shell conductivity (see 3.29). Applicable to connectors with conductive finishes only. Mated connectors shall be tested in accordance with test procedure EIA/ECA-364-83.

5. PACKAGING

5.1 Packaging. For acquisition purposes, the packaging requirements shall be as specified in the contract or order (see 6.2). When packaging of materiel is to be performed by DoD or in-house contractor personnel, these personnel need to contact the responsible packaging activity to ascertain packaging requirements. Packaging requirements are maintained by the Inventory Control Point's packaging activities within the Military Service or Defense Agency, or within the military service's system commands. Packaging data retrieval is available from the managing Military Department's or Defense Agency's automated packaging files, CD-ROM products, or by contacting the responsible packaging activity.

6. NOTES

(This section contains information of a general or explanatory nature that may be helpful, but is not mandatory.)

6.1 Intended use. The various types and classes of connectors are intended for use as follows:

a. Class C connectors are intended for external interconnection use on vans, shelters, trailers, buildings and heavy duty (rough service) applications. They are not for primary power distribution.

b. Class J connectors are intended for use only where class C connectors can be used but where a wire support grommet is necessary.

c. Class L connectors are intended for power connections in the current range from 40 to 200 amperes where heavy duty, waterproof and arc quenching ability are required and are to be used only with heavy-duty jacketed cables specified on the applicable insert standard. Connectors with conductive finishes are for AC circuits /grounding assemblies. Connectors with a non-conductive finish are for DC circuits / non-grounding assemblies.

d. Class R connectors are intended for use as general purpose heavy-duty connectors where pressurization and arc quenching ability are not required. The connectors can be made weatherproof when the accessory sealing adapter is attached. They are not for primary power distribution.

6.1.1 Use of alternate insert positions. When connectors of the same size and arrangement are installed sufficiently adjacent to one another to provide a danger of mating plug with the wrong receptacle, it as intended that alternate insert positions should be employed. Alternate insert positions are also used in the class L connectors to differentiate between the various power frequencies being used.

6.1.2 Wire sizes to be used with contacts. It is intended that the wire attached to each connector contact should be of the AWG size (or smaller diameter), corresponding to the contact size number. For example, it is intended that an AWG size 12 wire be soldered to at least a size 12 contact; and an AWG size 6 wire should be soldered or crimped if applicable to a size 4 or size 6 contact. SAE-AS39029/112 contact bushings should be used with class L contacts if the wire AWG is smaller than the wire barrel size.

6.1.3 Packaging and storage, cadmium plated connectors: See SAE-AMS-QQ-P-416 for packaging limitations for cadmium plated products. Users are advised that cadmium plated parts should not be packed in non-ventilated containers or in direct contact with wood or cardboard, especially under conditions of high humidity or moisture, due to a corrosive reaction that can occur between the cadmium plating and organic acids that form under these conditions.

6.2 Acquisition requirements. Procurement documents should specify the following:

a. Title, number, and date of this specification.
b. Applicable MS PIN.
c. Packaging requirements (see 5.1).

6.3 Definitions. See 6.3.1 through 6.3.4.

6.3.1 Arc quench type connector (class L). This type of connector is designed as a circuit breaking connector with special provisions to minimize damage to cable or connector and reduce the hazard to personnel during circuit rupture under the worst field conditions of high humidity and standing in mud or water. Specifically, any arc drawn while mating or unmating connectors under maximum electrical load will be extinguished before the pin contact leaves the socket contact insert chamber.

6.3.2 Grounding contacts. The contacts used for terminating the equipment safety grounding wires of the cable or equipment. The grounding pins are always longer than the phase pins for the same diameter.

6.3.3 Phase contacts. The contacts used for terminating the phase (also called the power or hot) conductors of the cable of equipment.

6.3.4 Neutral contacts. The contacts used for terminating the neutral conductor of the cable or equipment. The neutral pins are always longer than phase pins for the same diameter.

6.4 Qualification. With respect to products requiring qualification, awards will be made only for products which are, at the time of award of contract, qualified for inclusion in Qualified Products List, QPL No. 22992, whether or not such products have actually been so listed by that date. The attention of the contractors is called to these requirements, and manufacturers are urged to arrange to have products that they propose to offer to the Federal Government tested for qualification in order that they may be eligible to be awarded contracts or orders for the products covered by this specification. Information pertaining to qualification of products may be obtained from Defense Supply Center Columbus, ATTN: DLA Land and Maritime-VQ, 3990 East Broad Street, Columbus, Ohio 43218-3990. An online listing of products qualified to this specification may be found in the Qualified Products Database (QPD) at https://assist.dla.mil.

6.4.1 Assembly plants. Assembly plants must be listed on or approved for listing on the applicable qualified products list. The qualified connector manufacturer will certify that the assembly plant is approved for the distribution of the manufacturer's parts. The assembly plant will use only piece parts supplied by the qualified connector manufacturer. No testing other than visual examination is required of certified piece parts obtained from the qualified connector manufacturer, except when there is cause for rejection. All assemblies produced at the assembly plant will be subjected to examination of product to assure that the assembly process conforms with that established at the qualified manufacturing plant. Quality control requirements, including Government inspection surveillance, will be the same as required for the qualified connector manufacturer.

6.4.2. Copies of "Provisions Governing Qualification SD-6". Copies of "Provisions Governing Qualification SD-6" may be obtained from the ASSIST on-line database https://assist.dla.mil.

6.5 Finish colors. Coating will vary in color depending on basic metal alloy and method of manufacture. This variance in color does not alter the performance capabilities of the finish.

6.6 Military unique statement. This connector is military unique because it is an environment resisting, quick disconnect, power circular connectors, capable of operating in high shock, high vibration and high temperature environments as well as meeting the salt spray corrosion requirements of this specification.

6.7 Environmentally preferable material. Environmentally preferable materials should be used to the maximum extent possible to meet the requirements of this specification. As of the dating of this document, the U.S. Environmentally Protection Agency (EPA) is focusing efforts on reducing 31 priority chemicals. The list of chemicals and additional information is available on their website at http://www.epa.gov/osw/hazard/wastemin/priority.htm. Use of the materials on the list should be minimized or eliminated unless needed to meet the requirements specified herein (see Section 3).

6.8 Guidance on use of alternative parts with less hazardous or nonhazardous materials. This specification provides for a number of alternative plating materials via the PIN. Users should select the PIN with the least hazardous material that meets the form, fit and function requirements of their application. The EPA maintains an online list of toxic chemicals and hazardous substances at http://www.epa.gov/emergencies/tools.htm#lol.

6.9 Subject term (keyword) listing.

Accessories
Arc quenching
Control circuits
Dummy stowage
Electronic
Insert arrangement
Multi-contact
Power

6.10 Tin whisker growth. The use of alloys with tin content greater than 97 percent, by mass, may exhibit tin whisker growth problems after manufacture. Tin whiskers may occur anytime from a day to years after manufacture and can develop under typical operating conditions, on products that use such materials. Conformal coatings applied over top of a whisker-prone surface will not prevent the formation of tin whiskers. Alloys of 3 percent lead, by mass, have shown to inhibit the growth of tin whiskers. For additional information on this matter, refer to ASTM B545 (Standard Specification for Electrodeposited Coatings of Tin) (see 3.3.10).

6.11 Changes from previous issue. The margins of this specification are marked with vertical lines to indicate where changes from the previous issue were made. This was done as a convenience only and the Government assumes no liability whatsoever for any inaccuracies in these notations. Bidders and contractors are cautioned to evaluate the requirements of this document based on the entire content irrespective of the marginal notations and relationship to the previous issue.

CLASS L CONNECTORS - ENGINEERING APPLICATION INFORMATION

A.1 SCOPE

A.1.1 This appendix provides engineering application information for the benefit of users of MIL-DTL-22992, class L connectors. This appendix is not a mandatory part of this specification. The information contained herein is intended for guidance only.

A.2 DESIGN APPLICATION

A.2.1 These connectors are a special design for power distribution using portable power cable. They are designed for use where they will be subjected to severe impacts such as, dropping on concrete, run over by vehicles, or subjected to extremes of field service use. They are arc quenching, if inadvertently separated under full load. They are waterproof when mated or unmated, capped or uncapped. They are designed to meet all OSHA and National Electric Code requirements for grounding connectors.

A.3 SAFETY SELECTIVITY

A.3.1 These connectors are designed with mating polarization for specific current rating, voltage, frequency (Hz), phase, and grounding requirements. This prevents mating with a connector of incompatible power characteristics.

A.3.2 These connectors are designed in the sizes based on current rating as shown in table A-I.

TABLE A-I. Connector sizes.

Current rating (amps)	Shell size	Contact size	Insert arrangements available
40	28	#6	MS14054
60	32	#4	MS90565
100	44	#1/0	MS14055
200	52	#4/0	MS14057

A.3.3 These connectors are designed for use in the voltage, phase, wire, and frequency combinations as shown in table A-II.

TABLE A-II. Connector voltage, phase, wire and frequency.

Voltage	Phase 0	No wire	60 Hz	400 Hz
28 Vdc	-	2	N/A	N/A
120 Vac 1/	1	2	X	X
240 Vac	1	2	X	X
120/240 Vac	1	3	X	N/A
120/208 Vac	3	4	X	X
240/416 Vac	3	4	X	X
277/480 Vac	3	4	X	N/A

1/ All ac connectors have a separate contact (or contacts) for equipment system ground which is (are) electrically connected to the connecter shell.

A.4 CABLE INTERCONNECTION

A.4.1 These connecters are designed for direct plug-in connection to equipment, or to other class L connectors in “extension cord” fashion as shown on figure A-1. This is provided by a “one way” system wherein each of the different numbered connector is designed and designated for use as shown in table A-III.

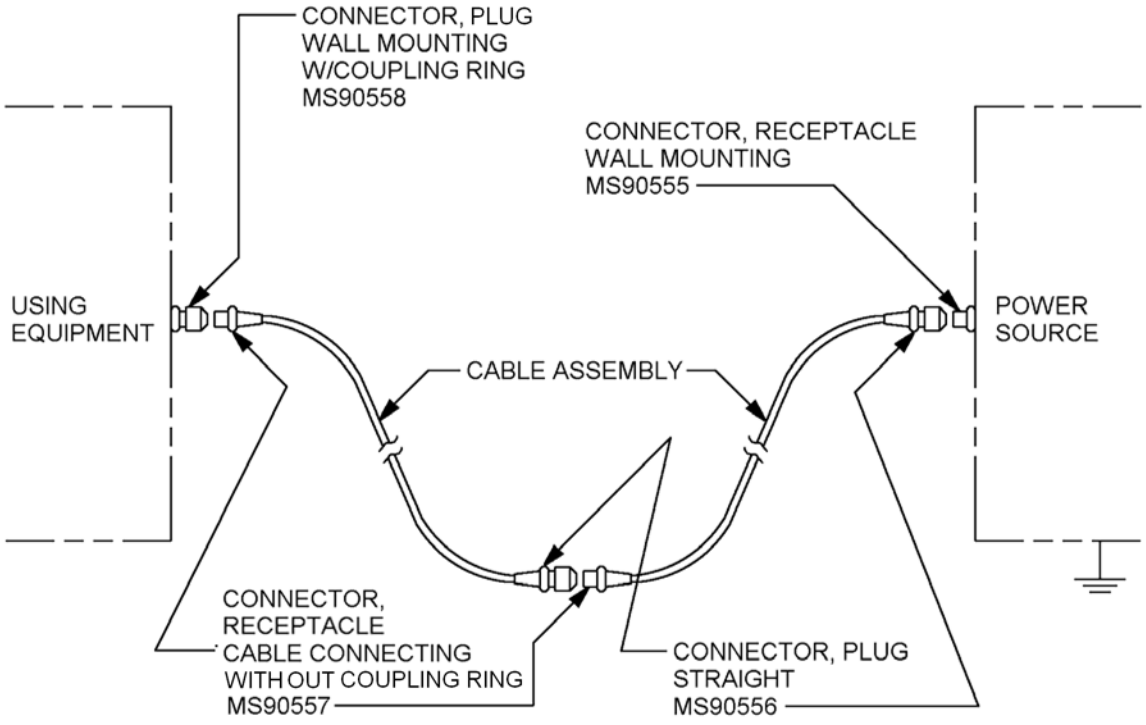

FIGURE A-1. Class L cable interconnection.

TABLE A-III. Cable interconnection.

Designated use	Connector MS number	Designed only with
power source receptacle	MS90555	sockets
cable plug with coupling ring	MS90556	pins
cable connecting receptacle without coupling ring	MS90557	sockets
wall mount plug with coupling ring	MS90558	pins

A.5 COMPLETE ASSEMBLIES

A.5.1 Each connector is supplied with a cap or cover. In addition, each cable plug is supplied with a cable gland and a cable grip. The cable grip is sized for the cable it will be used on. This sizing is controlled by the insert pattern number.

A.6 STANDARDIZED GENERATOR WIRING AND CONNECTIONS

A.6.1 Table A-IV shows the standard wire color coding and contact and generator terminal markings used with these connectors.

TABLE A-IV. Standardized generator wiring and connections.

Generator terminal marking	Current	Contact designation	Conductor circuit	Wire color
+ (POS)	28 Vdc	A	positive	black
- (NEG) ground	28 Vdc	N	negative	white
L_1	ac	A	phase A	black
L_2	ac	B	phase B	red
L_3	ac	C	phase C	blue (commercial may be orange)
L_0	ac	N	neutral	white
G (or Gnd)	ac	G	safety grounding	green (commercial may be bare)

A.7 CRIMP BUSHINGS FOR CLASS L CONNECTORS

A.7.1 Table A-V references SAE-AS39029/112 crimp bushings required for class L connectors.

TABLE A-V. Crimp bushings for class L connectors.

Insert arrangement	1/ Contacts		Cable conductors 1/ MS90556 and MS90557		Contact bushing requirements	
	Quantity	Size	Quantity	Size	Quantity	Part number MS3348-
28 – 02	2	6	2	8	2	6-8L
28 – 04	2	6	2	6	2	6-8L
	1	6(G)	2	10(G)	-	-
28 – 06	3	6	3	4	3	6-8L
	1	4(G)	3	8(G)	1	4-8L
28 – 07	3	6	3	6	-	-
	1	4(G)	3	6	1	4-5L
28 – 12	4	6	4	10(G)	4	6-8L
	1	6(G)	4	4	-	-
32 – 02	2	4	2	8(G)	2	4-6L
	2	4	2	6	2	4-6L
32 – 04	2	6(G)	2	10(G)	2	6-10L
32 – 05	2	4	2	4	-	-
	2	6(G)	2	8(G)	2	6-8L
32 – 06	3	4	3	6	3	4-6L
	1	4(G)	3	12(G)	1	4-8L
32 – 12	4	4	4	6	4	4-6L
	1	6(G)	4	12(G)	-	-
44 – 02	2	1/0	2	2	2	1-2L
	2	1/0	2	2	2	1-2L
44 – 04	2	4(G)	2	6(G)	2	4-6L
44 – 05	2	1/0	2	1	-	-
	2	4(G)	2	5(G)	2	4-5L
44 – 06	3	1/0	3	2	3	1-2L
	3	6(G)	3	8(G)	3	6-8L
44 – 12	4	1/0	4	2	4	1-2L
	4	6(G)	4	9(G)	4	6-9L
44 – 13	4	1/0	4	1	-	-
	4	6(G)	4	8(G)	4	6-8L
44 – 52	3	1/0	3	2	3	1-2L
	1	1/0(G)	1	2(G)	1	1-2L
44 – 56	3	1/0	3	6	3	1-6L
	1	1/0(G)	1	6(G)	1	1-6L
52 - 02	2	4/0	2	2/0	2	4/0-2/0L
52 - 06	3	4/0	3	2/0	3	4/0-2/0L
	3	4(G)	3	5(G)	3	4-5L

1/ (G) designates grounding.

CONCLUDING MATERIAL

Custodians:
Army – CR
Navy – EC
Air Force – 85
DLA – CC

Preparing activity:
DLA – CC

(Project 5935-2015-230)

Review activities:
Army – AR, MI
Navy – AS, MC, OS, SH, YD
Air Force – 19

NOTE: The activities listed above were interested in this document as of the date of this document. Since organizations and responsibilities can change, you should verify the currency of the information above using the ASSIST Online database at https://assist.dla.mil.