INCH-POUND

MIL-DTL-22641/16H
9 March 2010
SUPERSEDING
MIL-DTL-22641/16G
31 January 2000

DETAIL SPECIFICATION SHEET

ADAPTERS, COAXIAL TO WAVEGUIDE
(SERIES N TO WAVEGUIDE - CLASS 1)

This specification is approved for use by all Departments and Agencies of the Department of Defense.

The requirements for acquiring the adapters described herein shall consist of this document and the latest issue of MIL-DTL-22641.

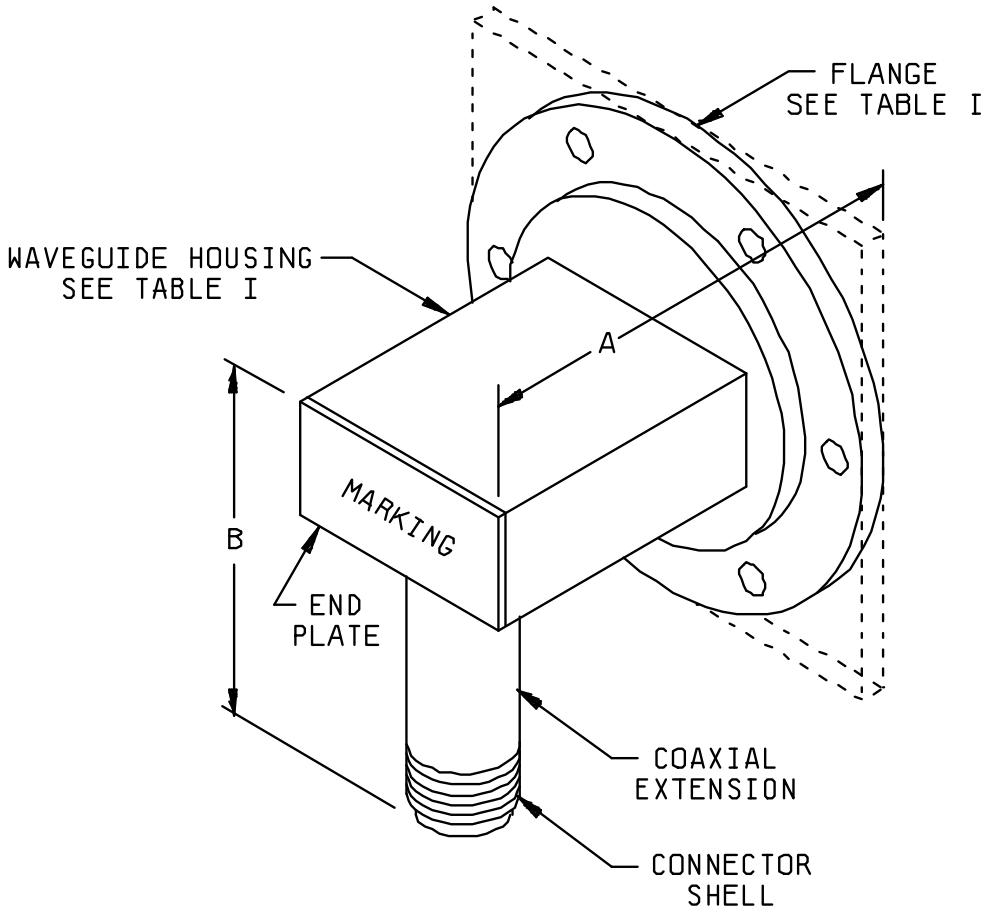

FIGURE 1. Configuration for PIN M22641/16-01 through M22641/16-22.

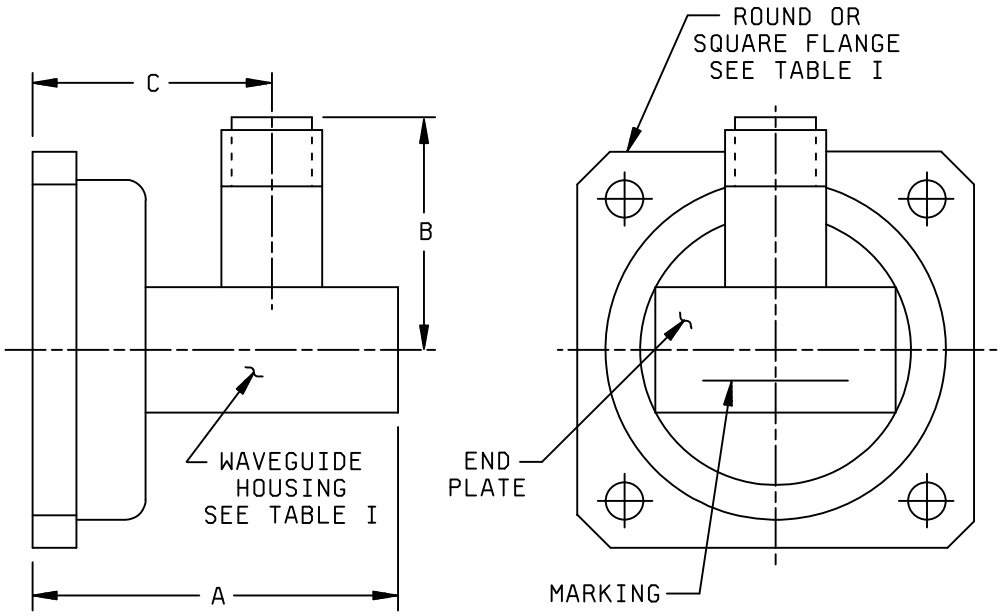

FIGURE 2. Configuration for PIN M22641/16-23 through M22641/16-30.

REQUIREMENTS:

Design, construction, and physical dimensions: See figures 1 and 2 and table I.

Frequency range: See table I.

VSWR: See table I. VSWR over 50 percent frequency range shall be VSWR measured over any continuous frequency band of width equal to 50 percent of the entire frequency range, chosen at the discretion of the tester.

RF insertion loss: See table I.

Radio frequency connector: The coaxial connector shall be compatible and mate with series N plug in accordance with MIL-PRF-39012/1.

Flange, waveguide: See table I.

Housing, waveguide: See table I.

TABLE I. Adapters, coaxial to waveguide (class I - series N to waveguide).

Dash number	Figure	Frequency range (GHz)	VSWR over entire frequency range 5/ 6/	VSWR over 50 percent frequency range 5/ 6/	RF insertion loss (dB) max 6/	Waveguide housing 7/	Flange 3/	Dimensions 1/ 2/			Waveguide and flange material
								A (max)	B (max)	C (max)	
01	1	7.05 - 10.0	1.25:1	1.20:1	.10	M85/1-069 M85/1-073 RG-51/U	M3922/53-002 UG-51/U Cover 3/	2.197 (55.80)	2.250 (57.15)	---	Copper alloy
02	1	5.85 - 8.2	1.25:1	1.20:1	.10	M85/1-063 M85/1-067 RG-50/U	M3922/55-001 UG-344/U Cover 3/	2.500 (63.50)	2.375 (60.33)	---	Copper alloy
03	1	3.95 - 5.85	1.25:1	1.20:1	.10	M85/1-051 M85/1-055 RG-49/U	M3922/57-002 UG-149A/U Cover 3/	3.687 (93.65)	2.437 (61.90)	---	Copper alloy
04	1	2.6 - 3.95	1.25:1	1.20:1	.10	M85/1-039 M85/1-043 RG-48/U	M3922/56-001 UG-53/U Cover 3/	4.062 (103.17)	4.250 (107.95)	---	Copper alloy
05	1	8.2 - 12.4	1.25:1	1.20:1	.20	M85/1-079 M85/1-075 RG-52/U	M3922/53-001 UG-39/U Cover 3/	2.000 (50.80)	2.218 (56.34)	---	Copper alloy
06	1	1.7 - 2.6	1.25:1	1.20:1	.05	M85/1-027 M85/1-031 RG-104/U	M3922/58-009 UG-435B/U Contact 3/	4.125 (104.78)	5.000 (127.00)	---	Copper alloy
07	1	1.12 - 1.7	1.25:1	1.20:1	.05	M85/1-015 M85/1-017 RG-69/U	M3922/58-007 UG-417B/U Contact 3/	5.250 (133.35)	7.250 (184.15)	---	Copper alloy
08	1	4.9 - 7.O5	1.25:1	1.20:1	.10	M85/1-057 M85/1-061 RG-343/U	M3922/52-037 UG-1354/U Contact 3/	2.000 (50.80)	2.000 (50.80)	---	Copper alloy
09	1	7.05 - 10.0	1.25:1	1.20:1	.10	M85/1-071 RG-68/U	M3922/53-004 UG-138/U Cover 3/	2.197 (55.80)	2.250 (57.15)	---	Aluminum alloy

See footnotes at end of table.

TABLE I. Adapters, coaxial to waveguide (class I - series N to waveguide) - Continued.

Dash number	Figure	Frequency range (GHz)	VSWR over entire frequency range 5/ 6/	VSWR over 50 percent frequency range 5/ 6/	RF insertion loss (dB) max 6/	Waveguide housing 7/	Flange 3/	Dimensions 1/ 2/			Waveguide and flange material
								A (max)	B (max)	C (max)	
10	1	5.85 -8.2	1.25:1	1.20:1	.10	M85/1-065 RG-106/U	M3922/55-002 UG-441/U Cover 3/	2.500 (63.50)	2.375 (60.33)	---	Aluminum alloy
11	1	3.95 - 5.85	1.25:1	1.20:1	.10	M85/1-053 RG-95/U	M3922/57-001 UG-407/U Cover 3/	3.687 (93.65)	2.437 (61.90)	---	Aluminum alloy
12	1	2.6 - 3.95	1.25:1	1.20:1	.10	M85/1-041 RG-75/U	M3922/56-002 UG-584/U Cover 3/	4.062 (103.17)	4.250 (107.95)	---	Aluminum alloy
13	1	8.2 - 12.4	1.25:1	1.20:1	.20	M85/1-077 RG-67/U	M3922/53-003 UG-135/U Cover 3/	2.000 (50.80)	2.218 (56.34)	---	Aluminum alloy
14	1	1.7 - 2.6	1.25:1	1.20:1	.10	M85/1-029 RG-105/U	M3922/58-010 UG-437B/U Contact 3/	4.125 (104.78)	5.000 (127.00)	---	Aluminum alloy
15	1	1.12 - 1.7	1.25:1	1.20:1	.05	M85/1-018 RG-103/U	M3922/58-008 UG-418B/U Contact 3/	5.250 (133.35)	7.250 (184.15)	---	Aluminum alloy
16	1	4.9 - 7.05	1.25:1	1.20:1	.10	M85/1-059 RG-344/U	M3922/52-038 UG-1355/U Contact 3/	2.000 (50.80)	2.000 (50.80)	---	Aluminum alloy
17	1	7.0 - 11.0	1.25:1	1.20:1	.20	M85/1-155 RG-320/U	M3922/70-001 UG-1493/U Cover 3/	1.515 (38.48)	1.755 (44.58)	---	Copper alloy
18	1	4.9 - 7.05	1.25:1	1.20:1	.10	M85/1-059 M85/1-060 RG-344/U	M3922/52-038 UG-1355/U Contact 3/	3.500 (88.90)	2.188 (55.58)	---	Aluminum alloy

See footnotes at end of table.

TABLE I. Adapters, coaxial to waveguide (class I - series N to waveguide) - Continued.

Dash number	Figure	Frequency range (GHz)	VSWR over entire frequency range 5/ 6/	VSWR over 50 percent frequency range 5/ 6/	RF insertion loss (dB) max 6/	Waveguide housing 7/	Flange 3/	Dimensions 1/ 2/			Waveguide and flange material
								A (max)	B (max)	C (max)	
19	1	4.9 - 7.05	1.25:1	1.20:1	.10	M85/1-061 RG-343/U	M3922/52-037 UG-1354/U Contact 3/	3.500 (88.90)	2.188 (55.58)	---	Copper alloy
20	1	2.25 - 5.5	1.30:1	1.20:1	.10	M85/4-001 RG-109/U	M3922/75-01 UG-509/U Cover	6.000 (152.40)	4.000 (101.60)	---	Copper alloy
21	1	5.0 - 10.0	1.40:1	1.30:1	.10	M85/4-003 RG-110/U	M3922/75-03 UG-511/U Cover	3.00 (76.2)	2.75 (69.9)	---	Copper alloy
22 4/	1	7.0 - 11.0	1.10:1	1.10:1	.20	M85/1-155 RG-320/U	M3922/70-001 UG-1493/U 3/ Cover	1.40 (35.6)	1.10 (27.9)	---	Copper alloy
23	2	3.95 - 5.85	1.065:1	1.03:1	.10	M85/1-055 RG-49/U	M3922/52-013 UG-1728/U Contact 3/	2.00 (50.8)	1.96 (49.8)	1.50 (38.1)	Copper alloy
24	2	3.95 - 5.85	1.065:1	1.03:1	.10	M85/1-053 RG-95/U	M3922/52-014 UG-1729/U Contact 3/	2.00 (50.80)	1.96 (49.8)	1.50 (38.1)	Aluminum alloy
25	2	7.05 - 10.00	1.065:1	1.03:1	.10	M85/1-073 RG-51/U	M3922/52-019 UG-1734/U Contact 3/	1.44 (36.6)	1.07 (27.2)	.88 (22.4)	Copper alloy
26	2	7.05 - 10.00	1.065:1	1.03:1	.10	M85/1-071 RG-68/U	M3922/52-020 UG-1735/U Contact 3/	1.44 (36.6)	1.07 (27.2)	.88 (22.4)	Aluminum alloy
27 8/	2	2.60 - 3.95	1.04:1	---	.05	M85/4-017	M3922/75-06	2.50 (63.5)	1.29 (32.8)	1.53 (38.9)	Aluminum alloy

See footnotes at end of table.

TABLE I. Adapters, coaxial to waveguide (class I - series N to waveguide) - Continued.

Dash number	Figure	Frequency range (GHz)	VSWR over entire frequency range 5/ 6/	VSWR over 50 percent frequency range 5/ 6/	RF insertion loss (dB) max 6/	Waveguide housing 7/	Flange 3/	Dimensions 1/ 2/			Waveguide and flange material
								A (max)	B (max)	C (max)	
28 8/	2	2.60 - 5.85	1.25:1 max	---	.05	M85/4-007	M3922/75-02	2.50 (63.5)	1.47 (37.3)	1.60 (40.6)	Aluminum alloy
29 8/	2	5.85 - 8.20	1.04:1	---	.05	M85/4-008	M3922/75-04	1.50 (38.1)	1.17 (29.7)	1.13 (28.7)	Aluminum alloy
30 8/	2	5.85 - 12.4	1.25:1 max	---	.05	M85/4-008	M3922/75-04	1.50 (38.1)	1.17 (29.7)	1.13 (28.7)	Aluminum alloy

1/ Dimensions are in inches.

2/ Metric equivalents are given for general information only and are based upon 1.00 inch = 25.4 mm.

3/ Flange in accordance with MIL-DTL-3922.

4/ Connector shall be female type N (corrosion-resistant steel). Shock, vibration, and salt spray requirements are not required for this Part or Identifying Number (PIN).

5/ A larger attenuator pad may be used for VSWR test setup (see figure 1 of MIL-DTL-22641) when measuring VSWR values less than 1.25:1.

6/ Swept frequency measuring technique is an acceptable alternate test method for determining VSWR and RF insertion loss value.

7/ Waveguide in accordance with MIL-DTL-85.

8/ Reduced height waveguides and flanges.

Marking: See figures 1 and 2.

PIN: M22641/16- (dash number from table I).

TABLE II. Cross-reference of AN nomenclature to PIN.

AN nomenclature	PIN M22641/16- ( )	AN nomenclature	PIN M22641/16- ( )
UG-397/U	01	UG-1653/U	09
UG-398/U	02	UG-1654/U	10
UG-399/U	03	UG-1655/U	11
UG-400/U	04	UG-1656/U	12
UG-446A/U	05	UG-1657/U	13
UG-952/U	06	UG-1658/U	14
UG-953/U	07	UG-1659/U	15
UG-1004/U	20	UG-1660/U	16
UG-1005/U	21	UG-1661/U	08
UG-1538/U	17	UG-1679/U	19
UG-1646/U	18		

Referenced documents. In addition to MIL-DTL-22641, this document references the following:
MIL-DTL-85
MIL-DTL-3922
MIL-PRF-39012/1

Marginal notations are not used in this revision to identify changes with respect to the previous issue due to the extent of the changes.

Custodians:
Army - CR
Navy - EC
Air Force - 85
DLA - CC

Review activities:
Army - AR, GL, MI
Navy - AS, OS
Air Force - 99

Preparing activity:
DLA - CC

(Project 5985-2010-004)

NOTE: The activities listed above were interested in this document as of the date of this document. Since organizations and responsibilities can change, you should verify the currency of the information above using the ASSIST Online database at https://assist.daps.dla.mil/.