DETAIL SPECIFICATION SHEET

KNIFE, COMBAT

This specification is approved for use by all Departments and Agencies of the Department of Defense.

The requirements for acquiring the product described herein shall consist of this specification sheet and MIL-DTL-20277.

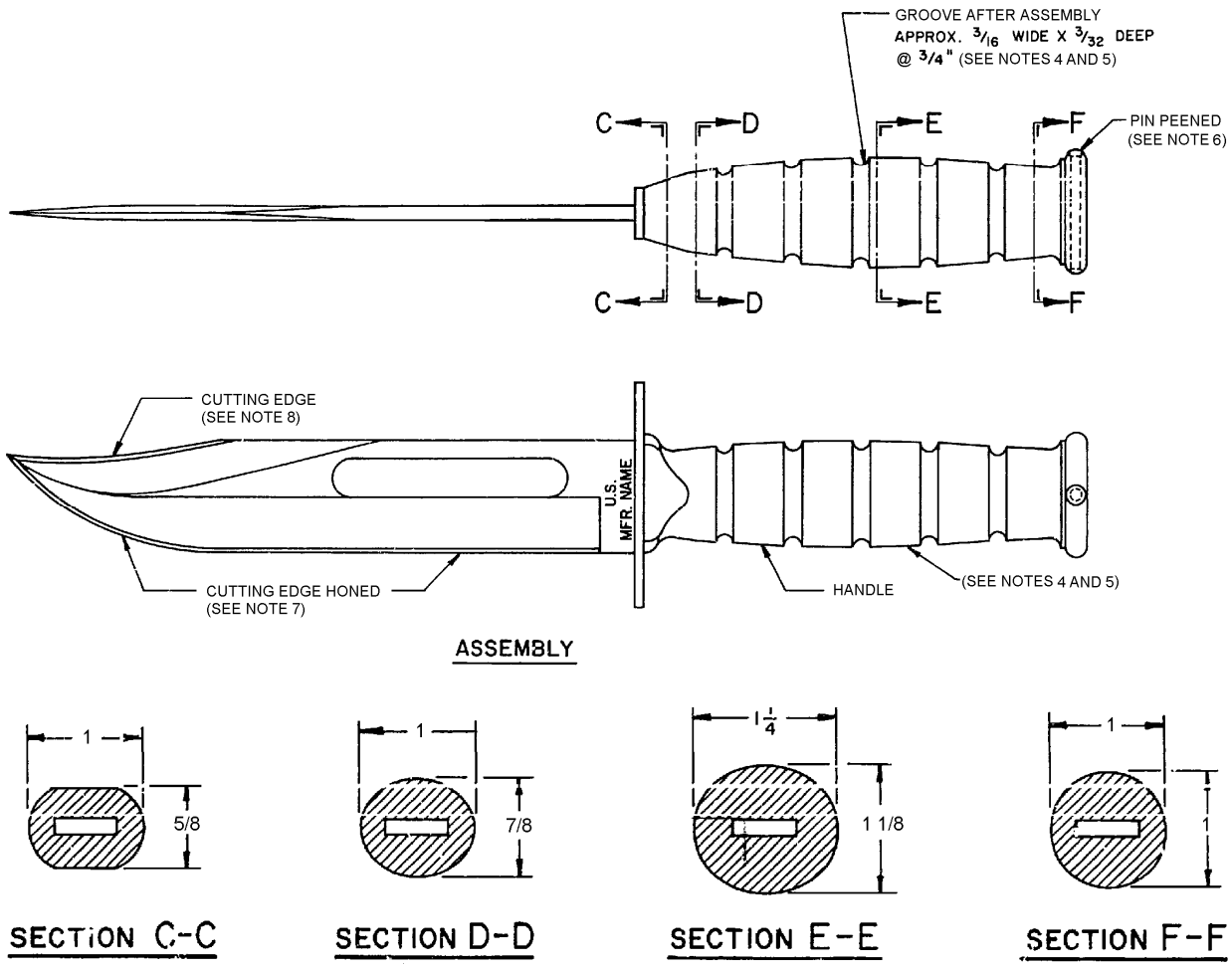

FIGURE 1. Knife dimensions and configuration.

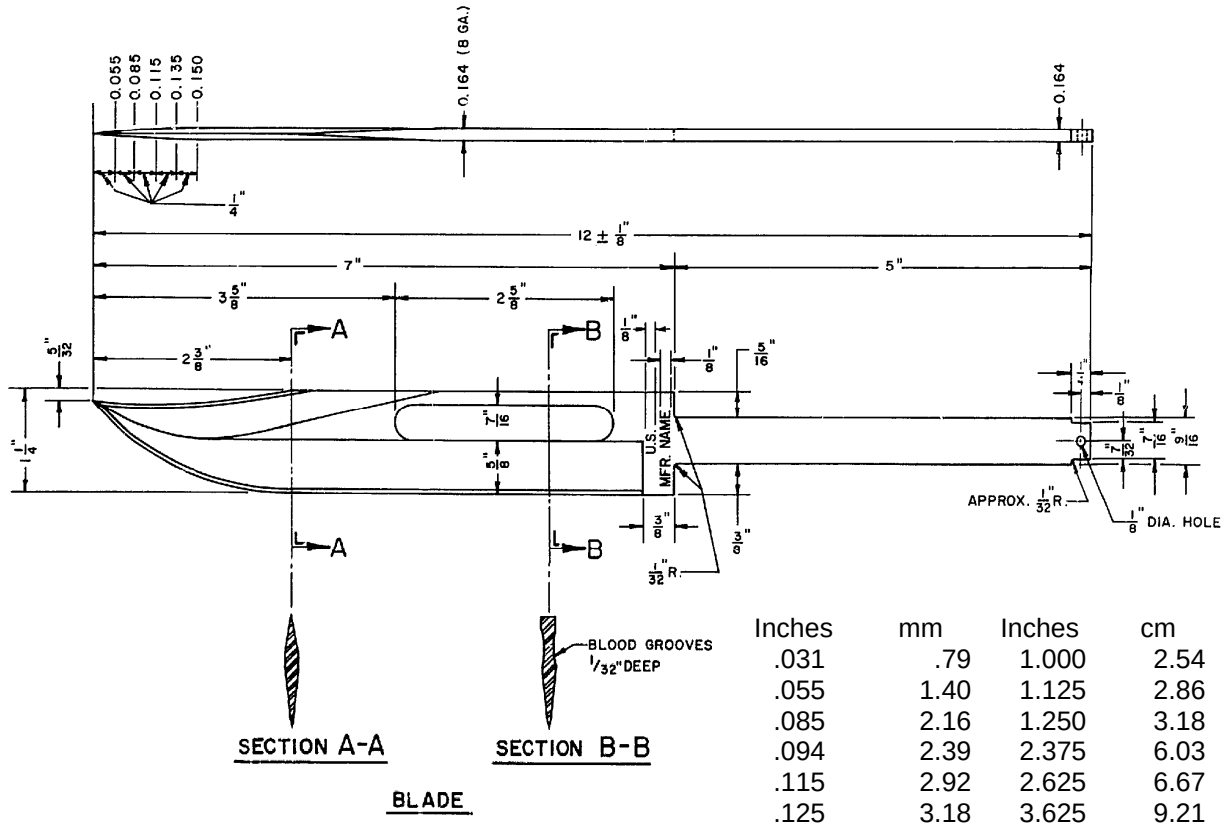

Inches	mm	Inches	cm
.031	.79	1.000	2.54
.055	1.40	1.125	2.86
.085	2.16	1.250	3.18
.094	2.39	2.375	6.03
.115	2.92	2.625	6.67
.125	3.18	3.625	9.21
.135	3.43	5.000	12.70
.150	3.81	7.000	17.78
.156	3.96	12.000	30.48
.164	4.17		
.188	4.78		
.219	5.56		
.313	7.95		
.375	9.53		
.438	11.11		
.563	14.30		
.625	15.88		
.875	22.23		

NOTES:

1. Dimensions are in inches.
2. Metric equivalents are given for information only.
3. Unless otherwise specified, tolerances for three place decimals is ±.005 inch (0.13 mm).
4. Leather laminations will be slotted for snug fit on tang and shall be assembled under pressure.
5. Leather handle shall be grooved and smoothed after assembly, and colored to match sheath.
6. Pin shall be peened on both ends and rounded off, force fit through tang only.
7. The blade shall contain a blood groove on each side. The cutting edge of the blade shall be ground and sharpened to a keen edge.
8. The cutting edge at the back of the blade near the tip shall be ground to a sharp edge.
9. Metal components break all sharp edges, except cutting edges, and remove all hanging burrs and slivers.

FIGURE 1. Knife dimensions and configuration - Continued.

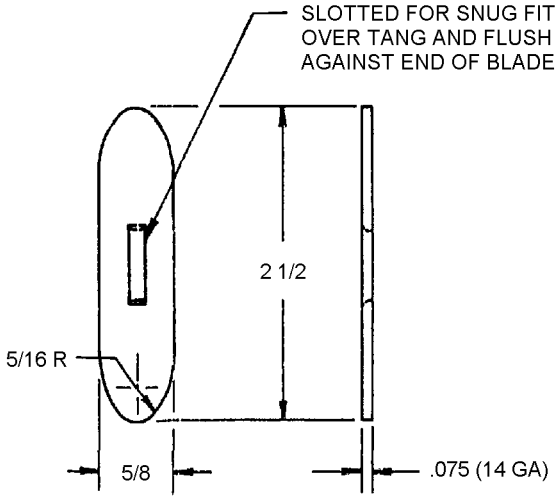

Inches	mm
.075	1.91
.3125	7.94
.625	15.88
2.500	63.50

NOTES:
1. Dimensions are in inches.
2. Metric equivalents are given for information only.
3. Unless otherwise specified, tolerances are as follows: Fractions ± 1/64 inch, three place decimals ±.005 inch (0.13 mm).
4. Slot in butt plate and guard will be required for snug fit on tang and against heel of blade and tang.
6. Break all sharp edges and remove all hanging burrs and slivers.

FIGURE 2. Guard dimensions and configuration.

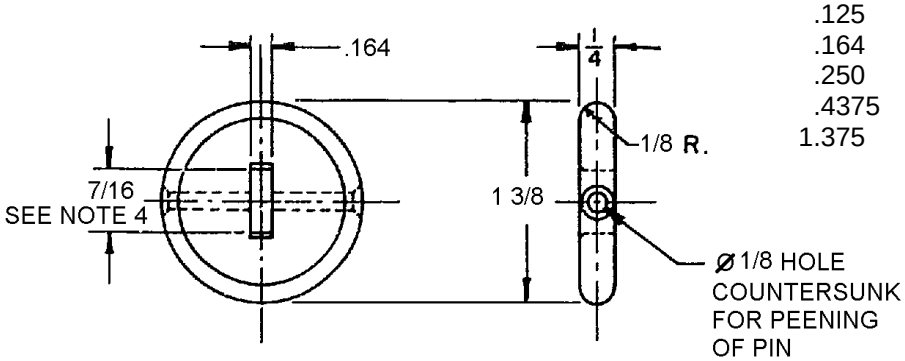

Inches	mm
.125	3.18
.164	4.17
.250	6.35
.4375	11.11
1.375	34.93

NOTES:
1. Dimensions are in inches.
2. Metric equivalents are given for information only.
3. Unless otherwise specified, tolerances are as follows: Fractions ± 1/64 inch, three place decimals ±.005 inch (0.13 mm).
4. Slot in butt plate and guard will be required for snug fit on tang and against heel of blade and tang.
5. Break all sharp edges and remove all hanging burrs and slivers.

FIGURE 3. Butt plate dimensions and configuration.

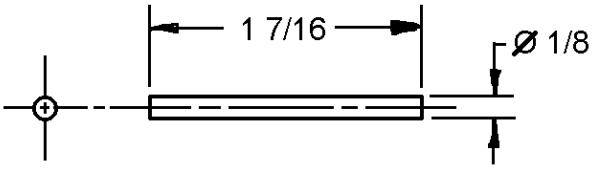

(FORCE FIT THROUGH TANG)

Inches	mm
.125	3.18
1.4375	36.51

NOTES:
1. Dimensions are in inches.
2. Metric equivalents are given for information only.
3. Unless otherwise specified, tolerance for fractions are ± 1/64 inch.

FIGURE 4. Pin dimensions and configuration.

REQUIREMENTS:

Dimensions and configurations: The design, construction, and physical dimensions shall be in accordance with MIL-DTL-20277 and on figures 1, 2, 3, and 4, in case of conflict between this drawing and MIL-DTL-20277, this drawing shall govern.

Sheath. Sheaths in accordance with MIL-DTL-20277/2 are for use with this knife.

Material:

Blade and tang. Steel 1095 in accordance with ASTM A29/A29M.

Pin, butt plate, and guard. Steel 1018 or 1020 in accordance with ASTM A29/A29M.

Blade finishing hardening. The finished blade shall be hardened and tempered in accordance with MIL-DTL-20277. The Rockwell hardness range shall be from C55 to C58.

Blade hardening. Blade hardening shall be in accordance with MIL-DTL-20277

Finish. Finish shall be in accordance with MIL-DTL-20277.

Knife construction:

All metal components shall be finished before assembling.

Guard shall fit the tang snugly so that all edges of the slot are in contact. The slot shall provide for the tang fillet to allow the guard to be in full contact with the heel of the blade.

Leather grip sections shall be assembled on the tang in appropriate sequence and of such thickness as to require compression thereof and permit the insertion of the pin through the butt plate to form a solid grip handle.

This assembly shall be such that the grip shall form an integral part of the knife, with no play between the grip and blade.

Pin shall be peened on both ends and rounded off, force fit through tang only then ground smooth.
The end of the tang shall be flush with the butt plate.

The handle assembly shall be deburred and colored to match the sheath (see MIL-DTL-20277).

Leather shall be in accordance with MIL-DTL-20277.

Color: Color shall be in accordance with MIL-DTL-20277.

Part or Identifying Number (PIN) example:

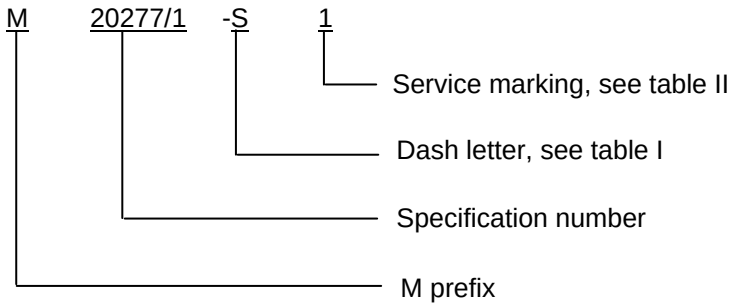

PIN example: M20277/1-S

TABLE I. Dash number for knife and/or sheath.

Dash letter	Description
-K	Knife only
-S	Knife and sheath

Marking. The letters shall be indent stamped, without damage to the knife, with durable and legible letters in accordance with MIL-STD-130.

The knife shall be marked on the heel end of the blade, as shown on figure 1, with the letters “U.S.” and shall include the manufacturers name or trademark or CAGE code.

Optional service marking. When specified in the PIN the knife shall be marked on the opposite side of the U.S. and manufacturers marking, see figure 2, with the service listed in table II. Dimensional location of service marking shall as specified on figure 1, except location is on opposite side, see figure 5.

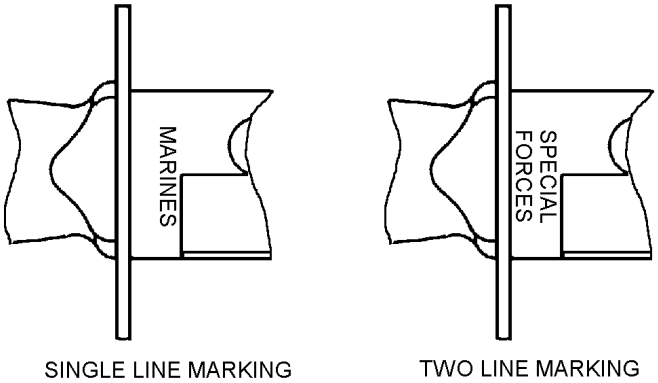

FIGURE 5. Service marking locations.

TABLE II. Service marking. 1/

Dash number	Service marking	Number of lines
-1	USMC	1
-2	SEALS	1
-3	RANGERS	1
-4	SPECIAL FORCES	2
-5	CALVERY	1
-6	AIRBORNE	1
-7	USAF	1
-8	NAVY	1
-9	COAST GUARD	2
-10	No service marking	N/A

Referenced documents. In addition to MIL-DTL-20277, this document references the following:

MIL-DTL-20277/2
MIL-STD-130
ASTM A29/A29M

CONCLUDING MATERIAL

Custodians:
Army - AR
Navy - SH
Air Force - 99
DLA - CC

Review activities:
Army - CR4, GL
Navy - CG, MC, SA

Preparing activity:
DLA - CC

(Project 1095-2007-004)

NOTE: The activities listed above were interested in this document as of the date of this document. Since organizations and responsibilities can change, you should verify the currency of the information above using the ASSIST Online database at http://assist.daps.dla.mil.