INCH-POUND
MIL-DTL-19648/1G
1 November 2011
SUPERSEDING
MIL-DTL-19648/1F
15 February 2002

DETAIL SPECIFICATION SHEET

RELAYS, TIME DELAY, THERMAL, HERMETICALLY SEALED, ADJUSTABLE, 3 to 180 SECONDS, FLANGE MOUNT, SPST CONTACTS, 2 AMPERES

Inactive for new design after 15 February 2002.
No superseding specification sheet.

This specification is approved for use by all Departments and Agencies of the Department of Defense.

The complete requirements for acquiring the relays described herein shall consist of this specification and MIL-DTL-19648.

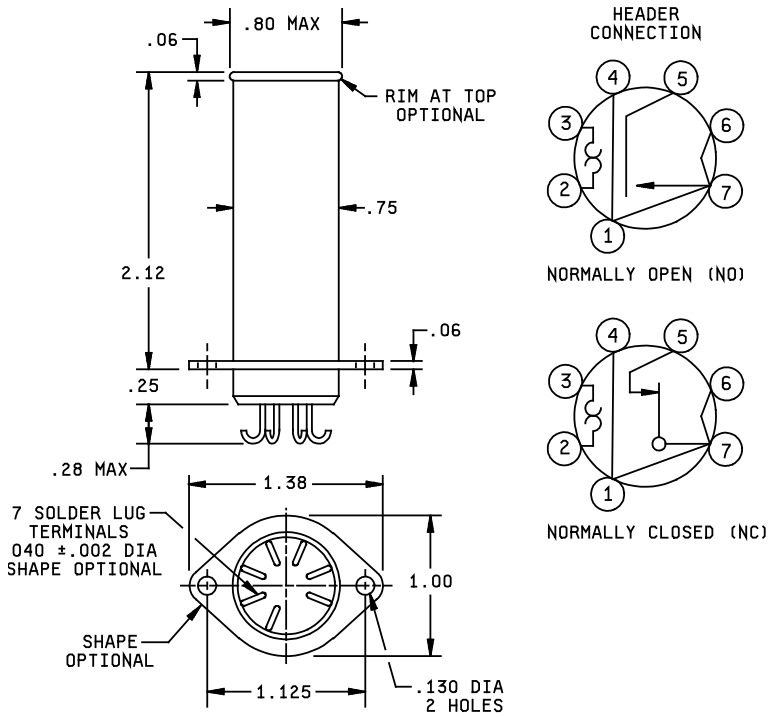

Inches	mm
.002	0.05
.040	1.02
.06	1.5
.130	3.30
.25	6.4
.28	7.1
.75	19.1
.80	20.3
1.00	25.4
1.125	28.58
1.38	35.1
2.12	53.8

NOTES:
1. Dimensions are in inches.
2. Metric equivalents are given for general information only.
3. Unless otherwise specified, tolerances shall be ± .02 (0.5 mm) for two place decimals and ± .005 (0.13) mm) for three place decimals.
4. Pins 1, 4, and 6 are electrically connected to pin 7 by internal construction. Do not use as tie points.

FIGURE 1. Dimensions and configurations.

REQUIREMENTS:

Dimensions and configuration: See figure 1.

Heater data:

Duty rating: Continuous.

Rated heater voltage: See table I.

Overvoltage: 100 percent rated heater voltage.

Minimum operate voltage: 83 percent of rated heater voltage over rated temperature range.

Minimum hold-in voltage: 83 percent of rated heater voltage over rated temperature range.

Power dissipation: 4.5 watts maximum.

Contact data:

Contact ratings:

Resistive: 2 amperes to 250 V ac; 1 ampere to 32 V dc.

Inductive: 25 volt-amperes at 250 V ac; 0.125 ampere at 32 V dc.

Contact resistance:

.050 ohm before life test.

.100 ohm after life test.

Contact arrangement:

Form A SPST NO.

Form B SPST NC.

Electrical data:

Dielectric withstanding voltage:

Sea level:

Contacts to heater	1000 ±50 V rms 60 Hz for 115 V, 60 Hz applications;
Contacts to case	1250 ±50 V rms 60 Hz for 115 V, 400 Hz applications.
Heater to case	
Between open contacts	500 ±10 V rms 60 Hz.

Altitude (70,000 feet):

Contacts to heater Contacts to case Heater to case	500 ±10 V rms 60 Hz.

Insulation resistance: 100 megohms minimum at 100 ±10 V dc between insulated terminals and any insulated terminal and case or frame.

Environmental data:

Shock: 50 G, 11 ms operating or nonoperating (level 1).

Vibration: 10-500 Hz operating or nonoperating (level 2)

Temperature range: Class B, -65°C to 125°C continuous duty

Hermetic seal: Seal test I.

Acceleration: Not applicable.

Salt spray: Applicable.

Moisture resistance: Not applicable.

Thermal shock: -65°C to +125°C operate time tolerance during exposure to temperature extremes shall not exceed ±15 percent of normal operate time.

Temperature extremes: -65°C to 125°C (class B).

Normal operate time tolerance: See table I.

Physical data:

Terminal strength: 5 ±.5 pounds.

Terminal configuration: Hooked solder terminals.

Adjustment: Covered.

Weight: 2 oz maximum.

Part number: Consists of the basic number of this specification sheet and a dash number taken from table I.

Example:

M19648	/1	-101
Specification designator	Specification sheet number	Dash number from table I.

Supersession information: See table II.

First article inspection and sample size: See table III.

TABLE I. Relay dash numbers and applicable characteristics.

M19648/1-	Heater voltage 1/	Contact arrangement	Normal operate time (N.O.T.)	Operate time seconds range seconds 2/	Operate time tolerance 3/
101	6.3	NO	6	3 - 8	
102	6.3	NO	10	8 - 12	
103	6.3	NO	20	12 - 22	
104	6.3	NO	30	22 - 33	
105	6.3	NO	40	33 - 45	
106	6.3	NO	60	45 - 65	
107	6.3	NO	80	65 - 90	
108	6.3	NO	120	90 - 125	
109	6.3	NO	160	125 - 180	
110	6.3	NC	6	3 - 8	
111	6.3	NC	10	8 - 12	
112	6.3	NC	20	12 - 22	
113	6.3	NC	30	22 - 33	
114	6.3	NC	40	33 - 45	
115	6.3	NC	60	45 - 65	
116	6.3	NC	80	65 - 90	
117	6.3	NC	120	90 - 125	
118	6.3	NC	160	125 - 180	±10% 4/ of N.O.T.
119	28	NO	6	3 - 8	
120	28	NO	10	8 - 12	
121	28	NO	20	12 - 22	
122	28	NO	30	22 - 33	
123	28	NO	40	33 - 45	
124	28	NO	60	45 - 65	
125	28	NO	80	65 - 90	
126	28	NO	120	90 - 125	
127	28	NO	160	125 - 180	
128	28	NC	6	3 - 8	
129	28	NC	10	8 - 12	
130	28	NC	20	12 - 22	
131	28	NC	30	22 - 33	
132	28	NC	40	33 - 45	
133	28	NC	60	45 - 65	
134	28	NC	80	65 - 90	
135	28	NC	120	90 - 125	
136	28	NC	160	125 - 180	

TABLE I. Relay dash numbers and applicable characteristics - Continued.

M19648/1-	Heater voltage 1/	Contact arrangement	Normal operate time (N.O.T.)	Operate time seconds range seconds 2/	Operate time tolerance 3/
137	115	NO	6	3 - 8	±10% 4/ of N.O.T.
138	115	NO	10	8 - 12	
139	115	NO	20	12 - 22	
140	115	NO	30	22 - 33	
141	115	NO	40	33 - 45	
142	115	NO	60	45 - 65	
143	115	NO	80	65 - 90	
144	115	NO	120	90 - 125	
145	115	NO	160	125 - 180	
146	115	NC	6	3 - 8	
147	115	NC	10	8 - 12	
148	115	NC	20	12 - 22	
149	115	NC	30	22 - 33	
150	115	NC	40	33 - 45	
151	115	NC	60	45 - 65	
152	115	NC	80	65 - 90	
153	115	NC	120	90 - 125	
154	115	NC	160	125 - 180	
155	6.3	NO	180	125 - 180	
156	6.3	NC	180	125 - 180	
157	28	NO	180	125 - 180	
158	28	NC	180	125 - 180	
159	115	NO	180	125 - 180	
160	115	NC	180	125 - 180	
161	230	NO	6	3 - 8	
162	230	NO	10	8 - 12	
163	230	NO	20	12 - 22	
164	230	NO	30	22 - 33	
165	230	NO	40	33 - 45	
166	230	NO	60	45 - 65	
167	230	NO	80	65 - 90	
168	230	NO	120	90 - 125	
169	230	NO	160	125 - 180	
170	230	NO	180	125 - 180	
171	230	NC	6	3 - 8	
172	230	NC	10	8 - 12	
173	230	NC	20	12 - 22	
174	230	NC	30	22 - 33	
175	230	NC	40	33 - 45	
176	230	NC	60	45 - 65	
177	230	NC	80	65 - 90	
178	230	NC	120	90 - 125	
179	230	NC	160	125 - 180	
180	230	NC	180	125 - 180	

1/ Operation shall be satisfactory over the frequency range of 0 to 400 Hz true rms.
2/ Basic time for which unit is designed. The timing range is the range of timing adjustment wherein the change in other operating characteristic is at a minimum considered acceptable for normal usage.
3/ Tolerance at rated heater voltage and room temperature. Voltage variation or temperature extremes will result in additional timing tolerance.
4/ Tolerance ±10% but not less than .4 seconds in N.O.T. time range of 3 to 10 seconds. Not less than 2 seconds in N.O.T. time range above 12 to 180 seconds.

TABLE II. Supersession information.

Superseded Part numbers and type designations		New part numbers	Superseded Part numbers and type designations		New part numbers
M19648/1-001	RY1B1A101	M19684/1-101	M19648/1-043	RY1B1B101	M19648/1-110
M19684/1-002	RY1B1A102	M19648/1-137	M19648/1-044	RY1B1B102	M19648/1-146
M19648/1-003	RY1B1A103	M19648/1-119	M19648/1-045	RY1B1B103	M19648/1-128
M19648/1-004	RY1B1A104	M19648/1-103	M19648/1-046	RY1B1B104	M19648/1-112
M19648/1-005	RY1B1A105	M19648/1-139	M19648/1-047	RY1B1B105	M19648/1-148
M19648/1-006	RY1B1A106	M19648/1-121	M19648/1-048	RY1B1B106	M19648/1-130
M19648/1-007	RY1B1A107	M19648/1-104	M19648/1-049	RY1B1B107	M19648/1-113
M19648/1-008	RY1B1A108	M19648/1-140	M19648/1-050	RY1B1B108	M19648/1-149
M19648/1-009	RY1B1A109	M19648/1-122	M19648/1-051	RY1B1B109	M19648/1-131
M19648/1-010	RY1B1A110	M19648/1-106	M19648/1-052	RY1B1B110	M19648/1-115
M19648/1-011	RY1B1A111	M19648/1-142	M19648/1-053	RY1B1B111	M19648/1-151
M19648/1-012	RY1B1A112	M19648/1-124	M19648/1-054	RY1B1B112	M19648/1-133
M19648/1-013	RY1B1A113	M19648/1-107	M19648/1-055	RY1B1B113	M19648/1-116
M19648/1-014	RY1B1A114	M19648/1-143	M19648/1-056	RY1B1B114	M19648/1-152
M19648/1-015	RY1B1A115	M19648/1-125	M19648/1-057	RY1B1B115	M19648/1-132
M19648/1-016	RY1B1A116	M19648/1-108	M19648/1-058	RY1B1B116	M19648/1-117
M19648/1-017	RY1B1A117	M19648/1-144	M19648/1-059	RY1B1B117	M19648/1-153
M19648/1-018	RY1B1A118	M19648/1-126	M19648/1-060	RY1B1B118	M19648/1-135
M19648/1-019	RY1B1A119	M19648/1-109	M19648/1-061	RY1B1B119	M19648/1-118
M19648/1-020	RY1B1A120	M19648/1-145	M19648/1-062	RY1B1B120	M19648/1-154
M19648/1-021	RY1B1A121	M19648/1-127	M19648/1-063	RY1B1B121	M19648/1-136
M19648/1-022	RY1B2A101	M19648/1-101	M19648/1-064	RY1B2B101	M19648/1-110
M19648/1-023	RY1B2A102	M19648/1-137	M19648/1-065	RY1B2B102	M19648/1-146
M19648/1-024	RY1B2A103	M19648/1-119	M19648/1-066	RY1B2B103	M19648/1-128
M19648/1-025	RY1B2A104	M19648/1-103	M19648/1-067	RY1B2B104	M19648/1-112
M19648/1-026	RY1B2A105	M19648/1-139	M19648/1-068	RY1B2B105	M19648/1-148
M19648/1-027	RY1B2A106	M19648/1-121	M19648/1-069	RY1B2B106	M19648/1-130
M19648/1-028	RY1B2A107	M19648/1-104	M19648/1-070	RY1B2B107	M19648/1-113
M19648/1-029	RY1B2A108	M19648/1-140	M19648/1-071	RY1B2B108	M19648/1-149
M19648/1-030	RY1B2A109	M19648/1-122	M19648/1-072	RY1B2B109	M19648/1-131
M19648/1-031	RY1B2A110	M19648/1-106	M19648/1-073	RY1B2B110	M19684/1-115
M19648/1-032	RY1B2A111	M19648/1-142	M19648/1-074	RY1B2B111	M19648/1-151
M19648/1-033	RY1B2A112	M19648/1-124	M19648/1-075	RY1B2B112	M19648/1-133
M19648/1-034	RY1B2A113	M19648/1-107	M19648/1-076	RY1B2B113	M19648/1-116
M19648/1-035	RY1B2A114	M19648/1-143	M19648/1-077	RY1B2B114	M19648/1-152
M19648/1-036	RY1B2A115	M19648/1-125	M19648/1-078	RY1B2B115	M19648/1-134
M19648/1-037	RY1B2A116	M19648/1-108	M19648/1-079	RY1B2B116	M19648/1-117
M19648/1-038	RY1B2A117	M19648/1-144	M19648/1-080	RY1B2B117	M19648/1-153
M19648/1-039	RY1B2A118	M19648/1-126	M19648/1-081	RY1B2B118	M19648/1-135
M19648/1-040	RY1B2A119	M19648/1-109	M19648/1-082	RY1B2B119	M19648/1-118
M19648/1-041	RY1B2A120	M19648/1-145	M19648/1-083	RY1B2B120	M19648/1-154
M19648/1-042	RY1B2A121	M19684/1-127	M19648/1-084	RY1B2B121	M19648/1-136

TABLE III. First article inspection and sample size.

Part number	Group submission
M19648/1-159	10 units plus 1 open unit First article testing as applicable
M19648/1-124	2 units
M19648/1-133	2 units First article inspection Group I.

Referenced documents:
MIL-DTL-19648

The margins of this specification are marked with vertical lines to indicate where modifications from this revision were made. This was done as a convenience only and the Government assumes no liability whatsoever for any inaccuracies in these notations. Bidders and contractors are cautioned to evaluate the requirements of this document based on the entire content irrespective of the marginal notations.

Custodians:
Army - CR
Navy - EC
Air Force - 85
DLA - CC

Review activities:
Army - AT, AV, CR4, MI
Navy - MC, OS
Air Force – 19

Preparing activity:
DLA - CC

(Project 5945-2011-041)

NOTE: The activities listed above were interested in this document as of the date of this document. Since organizations and responsibilities can change, you should verify the currency of the information above using the ASSIST Online database at https://assist.daps.dla.mil/ .