FED. SUP CLASS
4730

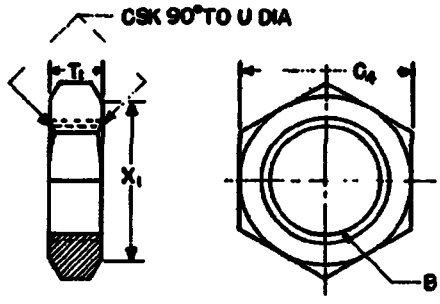


| TUBE O.D. NOM | B STRAIGHT THREAD CLASS 2B | $C_4$ HEX NOM | $T_1$ ±.02 | U DIA +0.015 -0.000 | $X_1$ DIA ±0.005 |
|---|---|---|---|---|---|
| 1/8 | 5/16-24UNF | 7/16 | .22 | 0.317 | 0.438 |
| 3/16 | 3/8 -24UNF | 1/2 | .22 | 0.380 | 0.500 |
| 1/4 | 7/16-20UNF | 9/16 | .25 | 0.443 | 0.563 |
| 5/16 | 1/2 -20UNF | 5/8 | .25 | 0.505 | 0.625 |
| 3/8 | 9/16-18UNF | 11/16 | .27 | 0.567 | 0.688 |
| 1/2 | 3/4 -16UNF | 7/8 | .31 | 0.755 | 0.875 |
| 5/8 | 7/8 -14UNF | 1 | .36 | 0.880 | 1.000 |
| 3/4 | 1-1/16-12UN | 1-1/4 | .41 | 1.067 | 1.250 |
| 7/8 | 1-3/16-12UN | 1-3/8 | .41 | 1.193 | 1.375 |
| 1 | 1-5/16-12UN | 1-1/2 | .41 | 1.317 | 1.500 |
| 1-1/4 | 1-5/8 -12UN | 1-7/8 | .41 | 1.630 | 1.875 |
| 1-1/2 | 1-7/8 -12UN | 2-1/8 | .41 | 1.880 | 2.125 |
| 2 | 2-1/2 -12UN | 2-3/4 | .41 | 2.505 | 2.750 |

NOTES:

1. MATERIAL: Steel, carbon in accordance with procurement specification.
   Steel, corrosion-resisting in accordance with procurement specification.

2. PROTECTIVE COATING: Cadmium plated in accordance with procurement specification.
   Zinc coated in accordance with procurement specification.
   Phosphate coating in accordance with procurement specification.
   Passivation treatment in accordance with procurement specification.

3. DIMENSIONS AND TOLERANCES: Dimensions and tolerances not shown shall be in accordance with the SAE Standard for Hydraulic Tube Fitting (SAE J514).

4. THREADS: Threads shall be in accordance with Screw-Thread Standards for Federal Services, Handbook H28.

5. The illustration is for identification and is not intended to restrict designs or shape not dimensioned.

6. This item is shown on MS51527, MS51528, MS51529, MS51530, MS51839, MS51841 and MS51842.

REVIEWER: CS, GL, ME
USER: AT, AF, EL, MC, OS, WT

APPROVED 22 NOV 1974 REVISED

THIS IS A DESIGN STANDARD AND SHALL NOT BE USED AS A PART NUMBER

| P.A. VC<br>Other Cust 82 | TITLE<br>LOCKNUT, ADJUSTABLE, 37° FLARED AND FLARELESS TYPE, HYDRAULIC | MILITARY STANDARD<br>MS51888 |
|---|---|---|
| PROCUREMENT SPECIFICATION<br>MIL-P-18866 | SUPERSEDES | SHEET 1 OF 1 |

DD FORM 1 SEP 61 672-1 (Coordinated) PREVIOUS EDITIONS OF THIS FORM ARE OBSOLETE.

This military standard is approved for use by all Departments and Agencies of the Department of Defense. Selection for all new engineering and design applications and for repetitive use shall be made from this document.