INCH-POUND

MS51507C
27 October 2016
SUPERSEDING
MS51507B
14 December 2015

DETAIL SPECIFICATION SHEET

# ELBOW, TUBE, 90 DEGREE, 37 DEGREE BULKHEAD, FLARED

This specification is approved for use by all Departments and Agencies of the Department of Defense.

Inactive for new design after 17 August 1999. For new design, use SAE-J514.

The requirements for acquiring the product described herein shall consist of this specification sheet and MIL-DTL-18866.

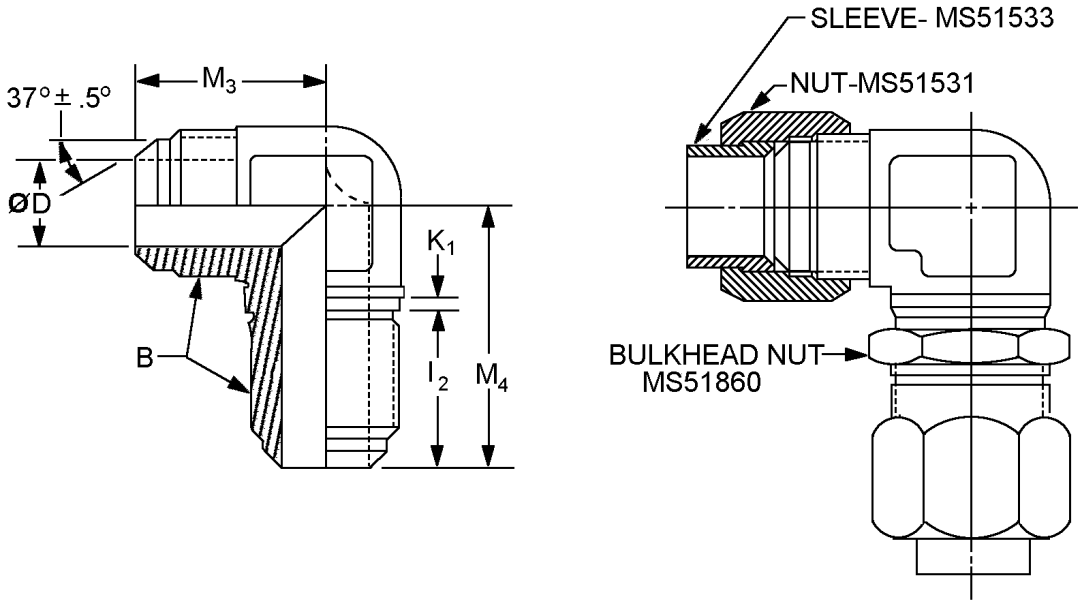


See notes at end of figure.

FIGURE 1. Elbow tube, 90°.

| Suffix designator | | Tube OD nom. | B Straight thread | D diameter | |
|---|---|---|---|---|---|
| Assembly (see note 4) | Body | | | Basic inches (mm) | Tolerance inches (mm) |
| A2 | B2 | .1250 (3.175) | .3125-24 UNF-2A | .062 (1.57) | ±.003 (0.08) |
| A3 | B3 | .1875 (4.763) | .3750-24 UNF-2A | .125 (3.18) | |
| A4 | B4 | .2500 (6.350) | .4375-20 UNF-2A | .172 (4.37) | |
| A5 | B5 | .3125 (7.938) | .5000-20 UNF-2A | .234 (5.94) | |
| A6 | B6 | .3750 (9.525) | .5625-18 UNF-2A | .297 (7.54) | |
| A8 | B8 | .5000 (12.700) | .7500-16 UNF-2A | .391 (9.93) | |
| A10 | B10 | .6250 (15.875) | .8750-14 UNF-2A | .484 (12.29) | |
| A12 | B12 | .7500 (19.050) | 1.0625-12 UN-2A | .609 (15.47) | |
| A14 | B14 | .8750 (22.225) | 1.1875-12 UN-2A | .718 (18.24) | |
| A16 | B16 | 1.0000 (25.400) | 1.3125-12 UN-2A | .844 (21.44) | +.007 -.005 (+0.18 -0.13) |
| A20 | B20 | 1.2500 (31.750) | 1.6250-12 UN-2A | 1.078 (27.38) | +.008 -.005 (+0.20 -0.13) |
| A24 | B24 | 1.5000 (38.100) | 1.8750-12 UN-2A | 1.312 (33.32) | |
| A32 | B32 | 2.0000 (50.800) | 2.500-12 UN-2A | 1.781 (45.24) | +.010 -.005 (+0.25 -.013) |

| Suffix designator | | $l_2$ .020 (0.51) inches (mm) | $K_1$ ±.020 (0.51) inches (mm) | $M_3$ ±.030 (0.76) inches (mm) | $M_4$ ±.030 (0.76) inches (mm) |
|---|---|---|---|---|---|
| Assembly | Body | | | | |
| A2 | B2 | .920 (23.37) | .094 (2.39) | .840 (21.34) | 1.420 (36.07) |
| A3 | B3 | .920 (23.37) | .094 (2.39) | .910 (23.11) | 1.450 (36.83) |
| A4 | B4 | 1.020 (25.91) | .094 (2.39) | .970 (24.64) | 1.590 (40.39) |
| A5 | B5 | 1.020 (25.91) | .094 (2.39) | 1.030 (26.16) | 1.620 (41.15) |
| A6 | B6 | 1.090 (27.69) | .094 (2.39) | 1.090 (27.69) | 1.810 (45.97) |
| A8 | B8 | 1.250 (31.75) | .125 (3.18) | 1.360 (34.54) | 2.110 (53.59) |
| A10 | B10 | 1.390 (35.31) | .125 (3.18) | 1.560 (39.62) | 2.390 (60.71) |
| A12 | B12 | 1.560 (39.62) | .125 (3.18) | 1.780 (45.21) | 2.670 (67.82) |
| A14 | B14 | 1.560 (39.62) | .125 (3.18) | 1.860 (47.24) | 2.730 (69.34) |
| A16 | B16 | 1.560 (39.62) | .125 (3.18) | 1.940 (49.28) | 2.800 (71.12) |
| A20 | B20 | 1.610 (40.89) | .125 (3.18) | 2.170 (55.12) | 3.120 (79.25) |
| A24 | B24 | 1.620 (41.15) | .125 (3.18) | 2.340 (59.44) | 3.420 (86.87) |
| A32 | B32 | 1.910 (48.51) | .125 (3.18) | 2.890 (73.41) | 4.110 (104.39) |

NOTES:
1. Dimensions are in inches.
2. Metric equivalents are given for information only.
3. Break all sharp edges, remove all burrs, and slivers.
4. Assemblies are only furnished to this specification (body, nut, and sleeve). Bodies are not to be stocked, stored, or issued.
5. Dimensions and tolerances not shown shall be in accordance with SAE-J514 for 37° flared fittings.
6. The drawing is for identification purposes only and is not intended to restrict designs and shapes not dimensioned.

FIGURE 1. Elbow tube 90° - Continued.

REQUIREMENTS:

Fittings shall be as specified on figure 1 and in table I.

Components of the assemblies shall be of the same material and finish.

Materials shall be in accordance with MIL-DTL-18866.

Finish. Finishes shall be as specified in table I. All platings shall be capable of meeting a minimum of 96 hours salt spray test in accordance with ASTM B117. The fittings shall show no evidence of corrosion after 96 hours of salt spray. Fluid passages, other openings and internal threads shall not be subject to the plating thickness requirement and may have bare areas provided they are protected with a light film of oil.

TABLE I. Material and finish identification codes.

| PIN code material/plating finish | Material | Plating finish |
|---|---|---|
| Blank | Steel | Cadmium plating in accordance with SAE-AMS-C-81562, type II, class 3 or SAE-AMS-QQ-P-416, type II, class 2. 1/ |
| H | Steel | Zinc-Aluminum in accordance with ASTM F1136/F1136M, grade 3, NC. |
| J | Steel | Zinc-nickel in accordance with SAE-AMS2417, type 2, grade B. 2/ |
| M | Nickel-copper alloy UNS N04400 | No additional finish. |
| N | High-chromium nickel alloy UNS N06690 | No additional finish. |
| P | Steel | Zinc phosphate finish in accordance MIL-DTL-16232 type Z, class 1. 3/ 4/ |
| R | Steel | Zinc plating in accordance with ASTM B633; type VI, Fe/Zn 8. 4/ |
| S | Corrosion resistant steel | No additional finish. Passivation in accordance with SAE-AMS2700, method 1, type 6 or 7. |
| T | Titanium | Anodize in accordance with SAE-AMS2488 type 2. 5/ |
| TF | Titanium | Fluoride phosphate in accordance with SAE-AMS2486. 5/ |
| Z | Steel | Zinc plating in accordance with ASTM B633; type II or III, Fe/Zn 8, or ASTM B695, type II, class 8. 4/ |
| ZC | Steel | Zinc may be any zinc plating from PIN codes H, J, and R with a colored chromate coating. 4/ |

1/ Embrittlement test need not be run. Cadmium shall not be used in oxygen or potable water systems.
2/ The zinc-nickel alloy plate shall contain 12% to 16% nickel. The coating thickness shall be 315µ inches (8µm) minimum.
3/ Hexavalent chromium free. Finish shall be ROHS compliant.
4/ Not for use in aircraft. Requires approval from the Program Office for all applications.
5/ A pretreatment, a modification of the fluoride treatment, or a post treatment shall be applied so the final color of the fittings shall be similar to FED-STD-595 colors 36076 through 36293. Titanium shall not be used in oxygen or potable water systems.

Trivalent wrenchability. When the finish has been damaged due to poor wrenchability, the surface of the connector shall be touched up using one of the brush plating processes below as appropriate to primary finish. The term “trivalent wrenchability” is used to evaluate the ability of the finish to withstand abrasion from an excessive amount of wrenching.

a. Brush plating of hard chromium by electrodeposition shall be in accordance with SAE-AMS-2451/5.
b. Brush plating of medium-hardness, low stress nickel by electrodeposition shall be in accordance with SAE-AMS-2451/9.

Maximum operating pressure. Maximum operating pressure shall be in accordance with SAE-J514.

PIN: The PIN consists of the letters “MS”, the specification number, a letter and number for elbow size, and a letter for material finish designator.

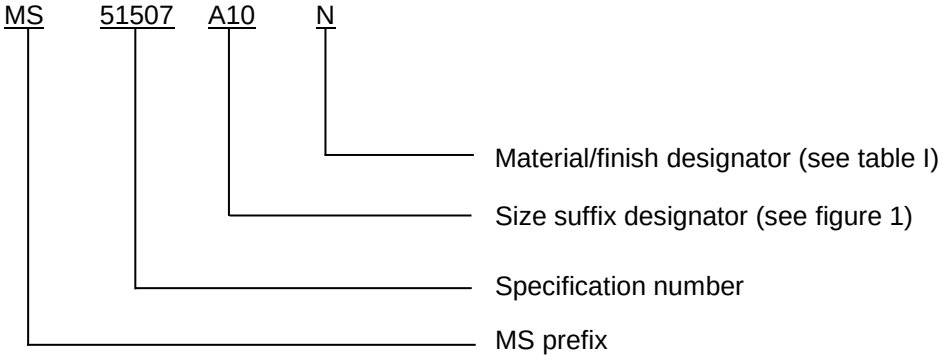


PIN example: MS51507A10N indicates an elbow tube 90°, .6250 inch (15.875 mm), high-chromium nickel.

Cadmium is not recommended. To the users of this document, it is recommended that the use of carbon steel material with cadmium plating be used only when other materials and finishes specified in this document cannot meet performance requirements.

Order of precedence. Unless otherwise noted herein or in the contract, in the event of a conflict between the text of this document and the references cited herein, the text of this document takes precedence. Nothing in this document, however, supersedes applicable laws and regulations unless a specific exemption has been obtained.

Referenced documents shall be of the issue in effect on date of invitations for bid.

Table II provides a detailed cross-reference of inactive MS51507 PIN’s and for new design SAE-J514 PIN’s.

MS51507 parts have straight threads in accordance with ASME B1.1 the SAE parts have straight threads in accordance with SAE-J425.

Plating “P” SAE allows a range of nickel from 6% to 20%. Below 12%, ZnNi is not much better than zinc plating, which is less expensive and easier to apply. Above 16%, ZnNi becomes more cathodic and no longer acts as a sacrificial coating - if a high nickel coating is damaged the steel beneath the coating will corrode at an accelerated rate.

SAE parts are exposed to a 72-hour salt spray test in lieu of 96 hours.

Users are cautioned to evaluate replacement parts for their particular application.

CAUTION: The superseding information is valid as of the date of this specification and may be superseded by subsequent revisions of the superseding document.

TABLE II. MS51507 to SAE-J514 cross reference.

| Inactive for new design MS51507- PIN | | Tube OD | For new design SAE-J514 PIN | |
|---|---|---|---|---|
| Assembly | Body | | Assembly | Body |
| MS51507A2 | MS51507B2 | 1/8 | Not available | Not available |
| MS51507A2H | MS51507B2H | 1/8 | Not available | Not available |
| MS51507A2J | MS51507B2J | 1/8 | Not available | Not available |
| MS51507A2M | MS51507B2M | 1/8 | J514-2-2-070701MA | J514-2-2-70701MB |
| MS51507A2N | MS51507B2N | 1/8 | J514-2-2-070701NA | J514-2-2-70701NB |
| MS51507A2P | MS51507B2P | 1/8 | J514-2-2-070701PA | J514-2-2-70701PB |
| MS51507A2R | MS51507B2R | 1/8 | Not available | Not available |
| MS51507A2S | MS51507B2S | 1/8 | J514-2-2-070701SA | J514-2-2-70701SB |
| MS51507A2T | MS51507B2T | 1/8 | J514-2-2-070701TA | J514-2-2-70701TB |
| MS51507A2TF | MS51507B2TF | 1/8 | Not available | Not available |
| MS51507A2Z | MS51507B2Z | 1/8 | J514-2-2-070701ZA | J514-2-20-70701ZB |
| MS51507A2ZC | MS51507B2ZC | 1/8 | Not available | Not available |
| | | | | |
| MS51507A3 | MS51507B3 | 3/16 | Not available | Not available |
| MS51507A3H | MS51507B3H | 3/16 | Not available | Not available |
| MS51507A3J | MS51507B3J | 3/16 | Not available | Not available |
| MS51507A3M | MS51507B3M | 3/16 | J514-3-3-070701MA | J514-3-3-70701MB |
| MS51507A3N | MS51507B3N | 3/16 | J514-3-3-070701NA | J514-3-3-70701NB |
| MS51507A3P | MS51507B3P | 3/16 | J514-3-3-070701PA | J514-3-3-70701PB |
| MS51507A3R | MS51507B3R | 3/16 | Not available | Not available |
| MS51507A3S | MS51507B3S | 3/16 | J514-3-3-070701SA | J514-3-3-70701SB |
| MS51507A3T | MS51507B3T | 3/16 | J514-3-3-070701TA | J514-3-3-70701TB |
| MS51507A3TF | MS51507B3TF | 3/16 | Not available | Not available |
| MS51507A3Z | MS51507B3Z | 3/16 | J514-3-3-070701ZA | J514-3-3-70701ZB |
| MS51507A3ZC | MS51507B3ZC | 3/16 | Not available | Not available |
| | | | | |
| MS51507A4 | MS51507B4 | 1/4 | Not available | Not available |
| MS51507A4H | MS51507B4H | 1/4 | Not available | Not available |
| MS51507A4J | MS51507B4J | 1/4 | Not available | Not available |
| MS51507A4M | MS51507B4M | 1/4 | J514-4-4-70701MA | J514-4-4-70701MB |
| MS51507A4N | MS51507B4N | 1/4 | J514-4-4-70701NA | J514-4-4-70701NB |
| MS51507A4P | MS51507B4P | 1/4 | J514-4-4-70701PA | J514-4-4-70701PB |
| MS51507A4R | MS51507B4R | 1/4 | Not available | Not available |
| MS51507A4S | MS51507B4S | 1/4 | J514-4-4-70701SA | J514-4-4-70701SB |
| MS51507A4T | MS51507B4T | 1/4 | J514-4-4-70701TA | J514-4-4-70701TB |
| MS51507A4TF | MS51507B4TF | 1/4 | Not available | Not available |
| MS51507A4Z | MS51507B4Z | 1/4 | J514-4-4-70701ZA | J514-4-4-70701ZB |
| MS51507A4ZC | MS51507B4ZC | 1/4 | Not available | Not available |
| | | | | |
| MS51507A5 | MS51507B5 | 5/16 | Not available | Not available |
| MS51507A5H | MS51507B5H | 5/16 | Not available | Not available |
| MS51507A5J | MS51507B5J | 5/16 | Not available | Not available |
| MS51507A5M | MS51507B5M | 5/16 | J514-5-5-070701MA | J514-5-5-070701MB |
| MS51507A5N | MS51507B5N | 5/16 | J514-5-5-070701NA | J514-5-5-070701NB |
| MS51507A5P | MS51507B5P | 5/16 | J514-5-5-070701PA | J514-5-5-070701PB |
| MS51507A5R | MS51507B5R | 5/16 | Not available | Not available |
| MS51507A5S | MS51507B5S | 5/16 | J514-5-5-070701SA | J514-5-5-070701SB |
| MS51507A5T | MS51507B5T | 5/16 | J514-5-5-070701TA | J514-5-5-070701TB |
| MS51507A5TF | MS51507B5TF | 5/16 | Not available | Not available |
| MS51507A5Z | MS51507B5Z | 5/16 | J514-5-5-070701ZA | J514-5-5-070701ZB |
| MS51507A5ZC | MS51507B5ZC | 5/16 | Not available | Not available |

TABLE II. MS51507 to SAE-J514 cross reference - Continued.

| Inactive for new design MS51507- PIN | | Tube OD | For new design SAE-J514 PIN | |
|---|---|---|---|---|
| Assembly | Body | | Assembly | Body |
| MS51507A6F | MS51507B6F | 3/8 | Not available | Not available |
| MS51507A6H | MS51507B6H | 3/8 | Not available | Not available |
| MS51507A6J | MS51507B6J | 3/8 | Not available | Not available |
| MS51507A6M | MS51507B6M | 3/8 | J514-6-6-070701MA | J514-6-6-070701MB |
| MS51507A6N | MS51507B6N | 3/8 | J514-6-6-070701NA | J514-6-6-070701NB |
| MS51507A6P | MS51507B6P | 3/8 | J514-6-6-070701PA | J514-6-6-070701PB |
| MS51507A6R | MS51507B6R | 3/8 | Not available | Not available |
| MS51507A6S | MS51507B6S | 3/8 | J514-6-6-070701SA | J514-6-6-070701SB |
| MS51507A6T | MS51507B6T | 3/8 | J514-6-6-070701TA | J514-6-6-070701TB |
| MS51507A6TF | MS51507B6TF | 3/8 | Not available | Not available |
| MS51507A6Z | MS51507B6Z | 3/8 | J514-6-6-070701ZA | J514-6-6-070701ZB |
| MS51507A6ZC | MS51507B6ZC | 3/8 | Not available | Not available |
| | | | | |
| MS51507A8 | MS51507B8 | 1/2 | Not available | Not available |
| MS51507A8H | MS51507B8H | 1/2 | Not available | Not available |
| MS51507A8J | MS51507B8J | 1/2 | Not available | Not available |
| MS51507A8M | MS51507B8M | 1/2 | J514-8-8-070701MA | J514-8-8-070701MB |
| MS51507A8N | MS51507B8N | 1/2 | J514-8-8-070701NA | J514-8-8-070701NB |
| MS51507A8P | MS51507B8P | 1/2 | J514-8-8-070701PA | J514-8-8-070701PB |
| MS51507A8R | MS51507B8R | 1/2 | Not available | Not available |
| MS51507A8S | MS51507B8S | 1/2 | J514-8-8-070701SA | J514-8-8-070701SB |
| MS51507A8T | MS51507B8T | 1/2 | J514-8-8-070701TA | J514-8-8-070701TB |
| MS51507A8TF | MS51507B8TF | 1/2 | Not available | Not available |
| MS51507A8Z | MS51507B8Z | 1/2 | J514-8-8-070701ZA | J514-8-8-070701ZB |
| MS51507A8ZC | MS51507B8ZC | 1/2 | Not available | Not available |
| | | | | |
| MS51507A10 | MS51507B10 | 5/8 | Not available | Not available |
| MS51507A10H | MS51507B10H | 5/8 | Not available | Not available |
| MS51507A10J | MS51507B10J | 5/8 | Not available | Not available |
| MS51507A10M | MS51507B10M | 5/8 | J514-10-10-070701MA | J514-10-10-070701MB |
| MS51507A10N | MS51507B10N | 5/8 | J514-10-10-070701NA | J514-10-10-070701NB |
| MS51507A10P | MS51507B10P | 5/8 | J514-10-10-070701PA | J514-10-10-070701PB |
| MS51507A10R | MS51507B10R | 5/8 | Not available | Not available |
| MS51507A10S | MS51507B10S | 5/8 | J514-10-10-070701SA | J514-10-10-070701SB |
| MS51507A10T | MS51507B10T | 5/8 | J514-10-10-070701TA | J514-10-8-070701TB |
| MS51507A10TF | MS51507B10TF | 5/8 | Not available | Not available |
| MS51507A10Z | MS51507B10Z | 5/8 | J514-10-10-070701ZA | J514-10-8-070701ZB |
| MS51507A10ZC | MS51507B10ZC | 5/8 | Not available | Not available |
| | | | | |
| MS51507A12 | MS51507B12 | 3/4 | Not available | Not available |
| MS51507A12H | MS51507B12H | 3/4 | Not available | Not available |
| MS51507A12J | MS51507B12J | 3/4 | Not available | Not available |
| MS51507A12M | MS51507B12M | 3/4 | J514-12-12-070701ZMA | J514-12-12-070701MB |
| MS51507A12N | MS51507B12N | 3/4 | J514-12-12-070701NA | J514-12-12-070701NB |
| MS51507A12P | MS51507B12P | 3/4 | J514-12-12-070701PA | J514-12-12-070701PB |
| MS51507A12R | MS51507B12R | 3/4 | Not available | Not available |
| MS51507A12S | MS51507B12S | 3/4 | J514-12-12-070701SA | J514-12-12-070701SB |
| MS51507A12T | MS51507B12T | 3/4 | J514-12-12-070701TA | J514-12-12-070701TB |
| MS51507A12TF | MS51507B12TF | 3/4 | Not available | Not available |
| MS51507A12Z | MS51507B12Z | 3/4 | J514-12-12-070701ZA | J514-12-12-070701ZB |
| MS51507A12ZC | MS51507B12ZC | 3/4 | Not available | Not available |

TABLE II. MS51507 to SAE-J514 cross reference - Continued.

| Inactive for new design MS51507- PIN | | Tube OD | For new design SAE-J514 PIN | |
|---|---|---|---|---|
| Assembly | Body | | Assembly | Body |
| MS51507A14 | MS51507B14 | 7/8 | Not available | Not available |
| MS51507A14H | MS51507B14H | 7/8 | Not available | Not available |
| MS51507A14J | MS51507B14J | 7/8 | Not available | Not available |
| MS51507A14M | MS51507B14M | 7/8 | J514-14-14-070701MA | J514-14-14-070701MB |
| MS51507A14N | MS51507B14N | 7/8 | J514-14-14-070701NA | J514-14-14-070701NB |
| MS51507A14P | MS51507B14P | 7/8 | J514-14-14-070701PA | J514-14-14-070701PB |
| MS51507A14R | MS51507B14R | 7/8 | Not available | Not available |
| MS51507A14S | MS51507B14S | 7/8 | J514-14-14-070701SA | J514-14-14-070701SB |
| MS51507A14T | MS51507B14T | 7/8 | J514-14-14-070701TA | J514-14-14-070701TB |
| MS51507A14TF | MS51507B14TF | 7/8 | Not available | Not available |
| MS51507A14Z | MS51507B14Z | 7/8 | J514-14-14-070701ZA | J514-14-14-070701ZB |
| MS51507A14ZC | MS51507B14ZC | 7/8 | Not available | Not available |
| | | | | |
| MS51507A16 | MS51507B16 | 1 | Not available | Not available |
| MS51507A16H | MS51507B16H | 1 | Not available | Not available |
| MS51507A16J | MS51507B16J | 1 | Not available | Not available |
| MS51507A16M | MS51507B16M | 1 | J514-16-16-070701MA | J514-16-16-070701MB |
| MS51507A16N | MS51507B16N | 1 | J514-16-16-070701NA | J514-16-16-070701NB |
| MS51507A16P | MS51507B16P | 1 | J514-16-16-070701PA | J514-16-16-070701PB |
| MS51507A16R | MS51507B16R | 1 | Not available | Not available |
| MS51507A16S | MS51507B16S | 1 | J514-16-16-070701SA | J514-16-16-070701SB |
| MS51507A16T | MS51507B16T | 1 | J514-16-16-070701TA | J514-16-16-070701TB |
| MS51507A16TF | MS51507B16TF | 1 | Not available | Not available |
| MS51507A16Z | MS51507B16Z | 1 | J514-16-16-070701ZA | J514-16-16-070701ZB |
| MS51507A16ZC | MS51507B16ZC | 1 | Not available | Not available |
| | | | | |
| MS51507A20 | MS51507B20 | 1 1/4 | Not available | Not available |
| MS51507A20H | MS51507B20H | 1 1/4 | Not available | Not available |
| MS51507A20J | MS51507B20J | 1 1/4 | Not available | Not available |
| MS51507A20M | MS51507B20M | 1 1/4 | J514-20-20-070701MA | J514-20-20-070701MB |
| MS51507A20N | MS51507B20N | 1 1/4 | J514-20-20-070701NA | J514-20-20-070701NB |
| MS51507A20P | MS51507B20P | 1 1/4 | J514-20-20-070701PA | J514-20-20-070701PB |
| MS51507A20R | MS51507B20R | 1 1/4 | Not available | Not available |
| MS51507A20S | MS51507B20S | 1 1/4 | J514-20-20-070701SA | J514-20-20-070701SB |
| MS51507A20T | MS51507B20T | 1 1/4 | J514-20-20-070701TA | J514-20-20-070701TB |
| MS51507A20TF | MS51507B20TF | 1 1/4 | Not available | Not available |
| MS51507A20Z | MS51507B20Z | 1 1/4 | J514-20-20-070701ZA | J514-20-20-070701ZB |
| MS51507A20ZC | MS51507B20ZC | 1 1/4 | Not available | Not available |
| | | | | |
| MS51507A24 | MS51507B24 | 1 1/2 | Not available | Not available |
| MS51507A24H | MS51507B24H | 1 1/2 | Not available | Not available |
| MS51507A24J | MS51507B24J | 1 1/2 | Not available | Not available |
| MS51507A24M | MS51507B24M | 1 1/2 | J514-24-24-070701MA | J514-24-24-070701MB |
| MS51507A24N | MS51507B24N | 1 1/2 | J514-24-24-070701NA | J514-24-24-070701NB |
| MS51507A24P | MS51507B24P | 1 1/2 | J514-24-24-070701PA | J514-24-24-070701PB |
| MS51507A24R | MS51507B24R | 1 1/2 | Not available | Not available |
| MS51507A24S | MS51507B24S | 1 1/2 | J514-24-24-070701SA | J514-24-24-070701SB |
| MS51507A24T | MS51507B24T | 1 1/2 | J514-24-24-070701TA | J514-24-24-070701TB |
| MS51507A24TF | MS51507B24TF | 1 1/2 | Not available | Not available |
| MS51507A24Z | MS51507B24Z | 1 1/2 | J514-24-24-070701ZA | J514-24-24-070701ZB |
| MS51507A24ZC | MS51507B24ZC | 1 1/2 | Not available | Not available |

TABLE II. MS51507 to SAE-J514 cross reference - Continued.

| Inactive for new design MS51518- PIN | | Tube OD | For new design SAE-J514 PIN | |
|---|---|---|---|---|
| Assembly | Body | | Assembly | Body |
| MS51507A32 | MS51507B32 | 2 | Not available | Not available |
| MS51507A32H | MS51507B32H | 2 | Not available | Not available |
| MS51507A32J | MS51507B32J | 2 | Not available | Not available |
| MS51507A32M | MS51507B32M | 2 | J514-32-32-070701MA | J514-32-32-070701MB |
| MS51507A32N | MS51507B32N | 2 | J514-32-32-070701NA | J514-32-32-070701NB |
| MS51507A32P | MS51507B32P | 2 | J514-32-32-070701PA | J514-32-32-070701PB |
| MS51507A32R | MS51507B32R | 2 | Not available | Not available |
| MS51507A32S | MS51507B32S | 2 | J514-32-32-070701SA | J514-32-32-070701SB |
| MS51507A32T | MS51507B32T | 2 | J514-32-32-070701TA | J514-32-32-070701TB |
| MS51507A32TF | MS51507B32TF | 2 | Not available | Not available |
| MS51507A32Z | MS51507B32Z | 2 | J514-32-32-070701ZA | J514-32-32-070701ZB |
| MS51507A32ZC | MS51507B32ZC | 2 | Not available | Not available |

Changes from previous issue. Marginal notations are not used in this revision to identify changes with respect to the previous issue, due to the extent of the changes.

Referenced documents. In addition to MIL-DTL-18866, this document references the following:

FED-STD-595/36076
FED-STD-595/36081
FED-STD-595/36099
FED-STD-595/36118
FED-STD-595/36134
FED-STD-595/36152
FED-STD-595/36170
FED-STD-595/36173
FED-STD-595/36176
FED-STD-595/36231
FED-STD-595/36251
FED-STD-595/36270
FED-STD-595/36280
FED-STD-595/36293
MIL-DTL-16232
MS51531
MS51533
MS51860
ASME B1.1
ASTM B117
ASTM B633
ASTM B695
ASTM F1136/F1136M
SAE-AMS-C-81562
SAE-AMS-QQ-P-416
SAE-AMS2417
SAE-AMS2451/5
SAE-AMS2451/9
SAE-AMS2486
SAE-AMS2488
SAE-AMS2700
SAE-J425
SAE-J514

CONCLUDING MATERIAL

Custodians:
Army - AR
Navy - OS
Air Force - 99
DLA - CC

Review activities:
Army - AT, MI
Navy - MC
Air Force - 71

Preparing activity:
DLA - CC

(Project 4730-2016-055)

NOTE: The activities listed above were interested in this document as of the date of this document. Since organizations and responsibilities can change, you should verify the currency of the information above using the ASSIST Online database at https://assist.dla.mil.