DEFENSE LOGISTICS AGENCY
LAND AND MARITIME
P.O. BOX 3990
COLUMBUS, OHIO 43218-3990

January 27, 2017

MEMORANDUM FOR MILITARY/INDUSTRY DISTRIBUTION

SUBJECT: Initial Drafts of: MS51506 through MS51513
Project Numbers: 4730-2017-037 through -044

These initial drafts for these subject documents are now available for viewing and downloading from the DLA Land and Maritime-VA Web site:

https://landandmaritimeapps.dla.mil/programs/milspec/default.aspx

Major changes to these documents include reactivate and remove cross reference tables to SAE-J514 parts. Other changes are marked in red.

Concurrence or comments are required at this Center within 30 days from the date of this letter. Late comments will be held for the next coordination of the document. Comments from military departments must be identified as either "Essential" or "Suggested". Essential comments must be justified with supporting data. Military review activities should forward comments to their custodians of this office, as applicable, in sufficient time to allow for consolidating the department reply. Lack of response to this draft will be construed as concurrence.

If these documents are of interest to you, please provide your comments or suggested changes. The point of contact for this document is Mr. William Carpenter, phone number 614-692-0573, facsimile transmission, 614-692-6939, e-mail William.F.CArpenter@dla.mil, or may be mailed via the US Postal Service to DLA LAND AND MARITIME, ATTN: VAI (Attention: William Carpenter), P.O. Box 3990, Columbus, OH 43218-3990.

Sincerely,

/ SIGNED /

ABDONASSER M. ABDOUNI
Chief,
Interconnection Branch

cc:
FMDD (James Anderson)

NOTE: This draft, dated 27 January 2017 prepared by DLA-CC, has not been approved and is subject to modification. DO NOT USE PRIOR TO APPROVAL. (PROJECT 4730-2017-039)

INCH-POUND

MS51508D
DRAFT
SUPERSEDING
MS51508C
27 October 2016

DETAIL SPECIFICATION SHEET

ELBOW, PIPE TO TUBE, 45 DEGREE, MALE PIPE END, 37 DEGREE FLARED

Reactivated after 20 January 2017 and may be used for new and existing designs and acquisitions.

This specification is approved for use by all Departments and Agencies of the Department of Defense.

The requirements for acquiring the product described herein shall consist of this specification sheet and MIL-DTL-18866.

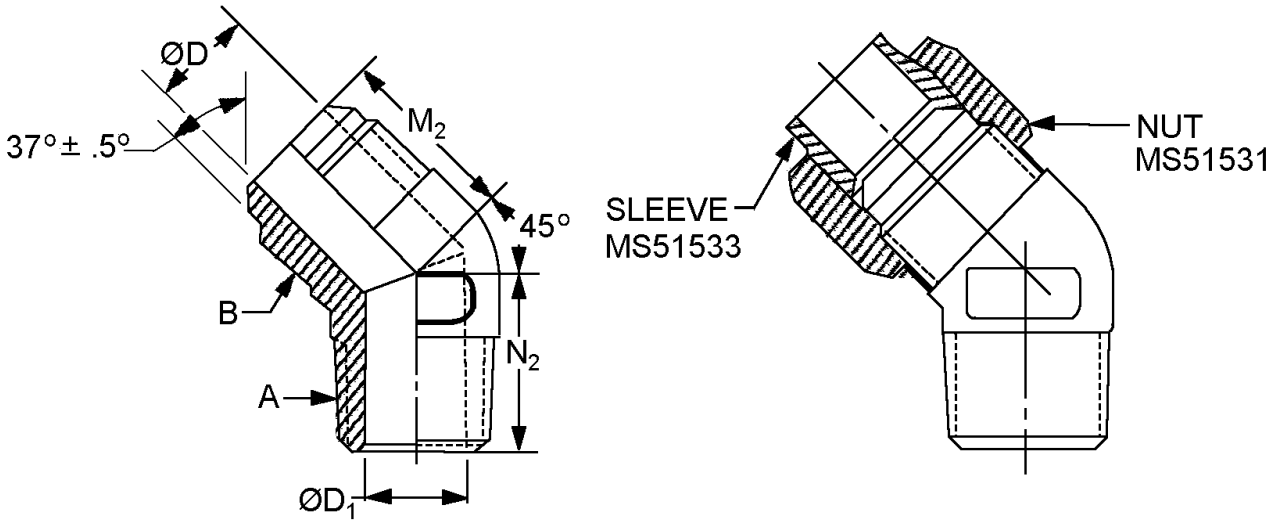

See notes at end of figure.

FIGURE 1. Elbow, pipe to tube 45°.

AMSC N/A

FSC 4730

Suffix designator		Tube OD nom.	A Thread NPTF	B Straight thread	D diameter	
Assembly (see note 4)	Body				Basic inches (mm)	Tolerance inches (mm)
A2	B2	.1250 (3.175)	1/8 - 27	.3125-24 UNF-2A	.062 (1.57)	±.003 (0.08)
A3	B3	.1875 (4.763)	1/8 - 27	.3750-24 UNF-2A	.125 (3.18)	
A4	B4	.2500 (6.350)	1/8 - 27	.4375-20 UNF-2A	.172 (4.37)	
A4-4	B4-4	.2500 (6.350)	1/4 - 18	.4375-20 UNF-2A	.172 (4.37)	
A5	B5	.3125 (7.938)	1/8 - 27	.5000-20 UNF-2A	.234 (5.94)	
A5-4	B5-4	.3125 (7.938)	1/4 - 18	.5000-20 UNF-2A	.234 (5.94)	
A6-2	B6-2	.3750 (9.525)	1/8 - 27	.5625-18 UNF-2A	.297 (7.54)	±.004 (0.10)
A6	B6	.3750 (9.525)	1/4 - 18	.5625-18 UNF-2A	.297 (7.54)	
A6-6	B6-6	.3750 (9.525)	3/8 - 18	.5625-18 UNF-2A	.297 (7.54)	
A6-8	B6-8	.3750 (9.525)	1/2 - 14	.5625-18 UNF-2A	.297 (7.54)	
A8-4	B8-4	.5000 (12.700)	1/4 - 18	.7500-16 UNF-2A	.391 (9.93)	
A8	B8	.5000 (12.700)	3/8 - 18	.7500-16 UNF-2A	.391 (9.93)	
A8-8	B8-8	.5000 (12.700)	1/2 - 14	.7500-16 UNF-2A	.391 (9.93)	
A8-12	B8-12	.5000 (12.700)	3/4 -14	.7500-16 UNF-2A	.391 (9.93)	
A10-6	B10-6	.6250 (15.875)	3/8 - 18	.8750-14 UNF-2A	.484 (12.29)	
A10	B10	.6250 (15.875)	1/2 - 14	.8750-14 UNF-2A	.484 (12.29)	
A12-8	B12-8	.7500 (19.050)	1/2 - 14	1.0625-12 UN-2A	.609 (15.47)	±.005 (0.13)
A12	B12	.7500 (19.050)	3/4 -14	1.0625-12 UN-2A	.609 (15.47)	
A14	B14	.8750 (22.225)	3/4 -14	1.1875-12 UN-2A	.718 (18.24)	
A16-12	B16-12	1.0000 (25.400)	3/4 -14	1.3125-12 UN-2A	.844 (21.44)	+.007 -.005 (+0.18 -0.13)
A16	B16	1.0000 (25.400)	1 - 11½	1.3125-12 UN-2A	.844 (21.44)	
A20	B20	1.2500 (31.750)	1 1/4 - 11 1/2	1.6250-12 UN-2A	1.078 (27.38)	+.008 -.005 (+0.20 -0.13)
A24	B24	1.5000 (38.100)	1 1/2 - 11 1/2	1.8750-12 UN-2A	1.312 (33.32)	
A32	B32	2.0000 (50.800)	2 - 11 1/2	2.500-12 UN-2A	1.781 (45.24)	+.010 -.005 (+0.25 -.013)

See notes at end of figure.

FIGURE 1. Elbow, pipe to tube 45°. - Continued.

Suffix designator		D_1 Dia. drill inches (mm)	M_2 inch (mm) ±.030 (0.76)	N_2 inch (mm) .030 (0.76)
Assembly (see note 4)	Body			
A2	B2	.188 (4.78)	.660 (16.76)	.520 (13.21)
A3	B3	.188 (4.78)	.660 (16.76)	.520 (13.21)
A4	B4	.188 (4.78)	.720 (18.29)	.640 (16.26)
A4-4	B4-4	.281 (7.14)	.820 (20.83)	.860 (21.84)
A5	B5	.188 (4.78)	.770 (19.56)	.640 (16.26)
A5-4	B5-4	.281 (7.14)	.820 (20.83)	.860 (21.84)
A6-2	B6-2	.188 (4.78)	.830 (21.08)	.670 (17.02)
A6	B6	.281 (7.14)	.830 (21.08)	.860 (21.84)
A6-6	B6-6	.406 (10.31)	.870 (22.10)	.950 (24.13)
A6-8	B6-8	.531 (13.49)	.880 (22.35)	1.170 (29.72)
A8-4	B8-4	.281 (7.14)	.980 (24.89)	.950 (24.13)
A8	B8	.406 (10.31)	.980 (24.89)	.950 (24.13)
A8-8	B8-8	.531 (13.49)	.990 (25.15)	1.170 (29.72)
A8-12	B8-12	.719 (18.26)	1.040 (26.42)	1.200 (30.48)
A10-6	B10-6	.406 (10.31)	1.110 (28.19)	.980 (24.89)
A10	B10	.531 (13.49)	1.110 (28.19)	1.170 (29.72)
A12-8	B12-8	.531 (13.49)	1.280 (32.51)	1.200 (30.48)
A12	B12	.719 (18.26)	1.280 (32.51)	1.200 (30.48)
A14	B14	.719 (18.26)	1.390 (35.31)	1.270 (32.26)
A16-12	B16-12	.719 (18.26)	1.470 (37.34)	1.290 (32.77)
A16	B16	.938 (23.83)	1.470 (37.34)	1.480 (37.59)
A20	B20	1.250 (31.75)	1.590 (40.39)	1.670 (42.42)
A24	B24	1.500 (38.10)	1.780 (45.21)	1.770 (44.96)
A32	B32	1.938 (49.23)	2.220 (56.39)	2.110 (53.59)

NOTES:
1. Dimensions are in inches.
2. Metric equivalents are given for information only.
3. Break all sharp edges, remove all burrs, and slivers.
4. Assemblies are only furnished to this specification (body, nut, and sleeve). Bodies are not to be stocked, stored, or issued.
5. Dimensions and tolerances not shown shall be in accordance with SAE-J514 for 37°flared fittings.
6. The drawing is for identification purposes only and is not intended to restrict designs and shapes not dimensioned.

FIGURE 1. Elbow, pipe to tube 45°. - Continued.

REQUIREMENTS:

Fittings shall be as specified on figure 1 and in table I.

Components of the assemblies shall be of the same material and finish.

Materials shall be in accordance with MIL-DTL-18866.

Finish. Finishes shall be as specified in table I. All plating's shall be capable of meeting a minimum of 96 hours salt spray test in accordance with ASTM B117. The fittings shall show no evidence of red corrosion after 96 hours of salt spray. Fluid passages, other openings and internal threads shall not be subject to the plating thickness requirement and may have bare areas provided they are protected with a light film of oil.

TABLE I. Material and finish identification codes.

PIN code material/plating finish	Material	Plating finish
Blank	Steel	Cadmium plating in accordance with SAE-AMS-C-81562, type II, class 3 or SAE-AMS-QQ-P-416, type II, class 2. 1/
H	Steel	Zinc-Aluminum in accordance with ASTM F1136/F1136M, grade 3, NC.
J	Steel	Zinc-nickel in accordance with SAE-AMS2417, type 2, grade B. 2/
M	Nickel-copper alloy UNS N04400	No additional finish.
N	High-chromium nickel alloy UNS N06690	No additional finish.
P	Steel	Zinc phosphate finish in accordance MIL-DTL-16232 type Z, class 1. 3/ 4/
R	Steel	Zinc plating in accordance with ASTM B633; type III or V ~~VI~~, Fe/Zn 8. 4/
S	Corrosion resistant steel	No additional finish. Passivation in accordance with SAE-AMS2700, method 1, type 6 or 7.
T	Titanium	Anodize in accordance with SAE-AMS2488 type 2. 5/
TF	Titanium	Fluoride phosphate in accordance with SAE-AMS2486. 5/
Z	Steel	Zinc plating in accordance with ASTM B695, type I, class 8 4/
ZC	Steel	Zinc may be any zinc plating from PIN codes ~~H~~ J, R and Z with a colored chromate coating. 4/

1/ Embrittlement test need not be run. Cadmium shall not be used in oxygen or potable water systems.
2/ The zinc-nickel alloy plate shall contain 12% to 16% nickel. The coating thickness shall be 315µ inches (8µm) minimum.
3/ Hexavalent chromium free. Finish shall be ROHS compliant.
4/ Not for use in aircraft. Requires approval from the Program Office for all applications.
5/ A pretreatment, a modification of the fluoride treatment, or a post treatment shall be applied so the final color of the fittings shall be similar to FED-STD-595 colors 36076 through 36293. Titanium shall not be used in oxygen or potable water systems.

Trivalent wrenchability. When the finish has been damaged due to poor wrenchability, the surface of the connector shall be touched up using one of the brush plating processes below as appropriate to primary finish. The term "trivalent wrenchability" is used to evaluate the ability of the finish to withstand abrasion from an excessive amount of wrenching.

a. Brush plating of hard chromium by electrodeposition shall be in accordance with SAE-AMS-2451/5.
b. Brush plating of medium-hardness, low stress nickel by electrodeposition shall be in accordance with SAE-AMS-2451/9.

Maximum operating pressure. Maximum operating pressure shall be in accordance with SAE-J514.

PIN: The PIN consists of the letters “MS”, the specification number, a letter and number for elbow size, and a letter for material finish designator.

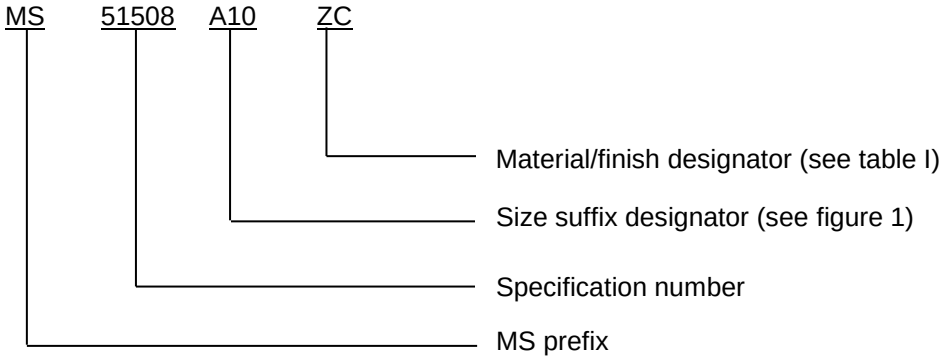

PIN example: MS51508A10FA10ZC indicates an elbow 45°, pipe to tube, .6250 inch (15.875 mm), steel zinc plated colored chromate.

Cadmium is not recommended. To the users of this document, it is recommended that the use of carbon steel material with cadmium plating be used only when other materials and finishes specified in this document cannot meet performance requirements.

Order of precedence. Unless otherwise noted herein or in the contract, in the event of a conflict between the text of this document and the references cited herein, the text of this document takes precedence. Nothing in this document, however, supersedes applicable laws and regulations unless a specific exemption has been obtained.

Referenced documents shall be of the issue in effect on date of invitations for bid.

Changes from previous issue. Marginal notations are not used in this revision to identify changes with respect to the previous issue, due to the extent of the changes.

Referenced documents. In addition to MIL-DTL-18866, this document references the following:

FED-STD-595/36076	FED-STD-595/36176	MS51533	SAE-AMS2451/5
FED-STD-595/36081	FED-STD-595/36231	ASTM B117	SAE-AMS2451/9
FED-STD-595/36099	FED-STD-595/36251	ASTM B633	SAE-AMS2486
FED-STD-595/36118	FED-STD-595/36270	ASTM B695	SAE-AMS2488
FED-STD-595/36134	FED-STD-595/36280	ASTM F1136/F1136M	SAE-AMS2700
FED-STD-595/36152	FED-STD-595/36293	SAE-AMS-C-81562	SAE-J514
FED-STD-595/36170	MIL-DTL-16232	SAE-AMS-QQ-P-416	
FED-STD-595/36173	MS51531	SAE-AMS2417	

CONCLUDING MATERIAL

Custodians:
Army - AR
Navy - OS
Air Force - 99
DLA - CC

Review activities:
Army - AT, MI
Navy - MC
Air Force - 71

Preparing activity:
DLA - CC

(Project 4730-2017-039)

NOTE: The activities listed above were interested in this document as of the date of this document. Since organizations and responsibilities can change, you should verify the currency of the information above using the ASSIST Online database at https://assist.dla.mil.