INCH-POUND

MIL-DTL-15370/10E
22 October 2012
SUPERSEDING
MIL-DTL-15370/10D
7 May 2008

DETAIL SPECIFICATION SHEET

COUPLERS, DIRECTIONAL (COAXIAL, SMA CONNECTORS) (.50 to 18 GHz)

This specification is approved for use by all Departments and Agencies of the Department of Defense.

The requirements for acquiring the couplers described herein shall consist of this specification sheet and MIL-DTL-15370.

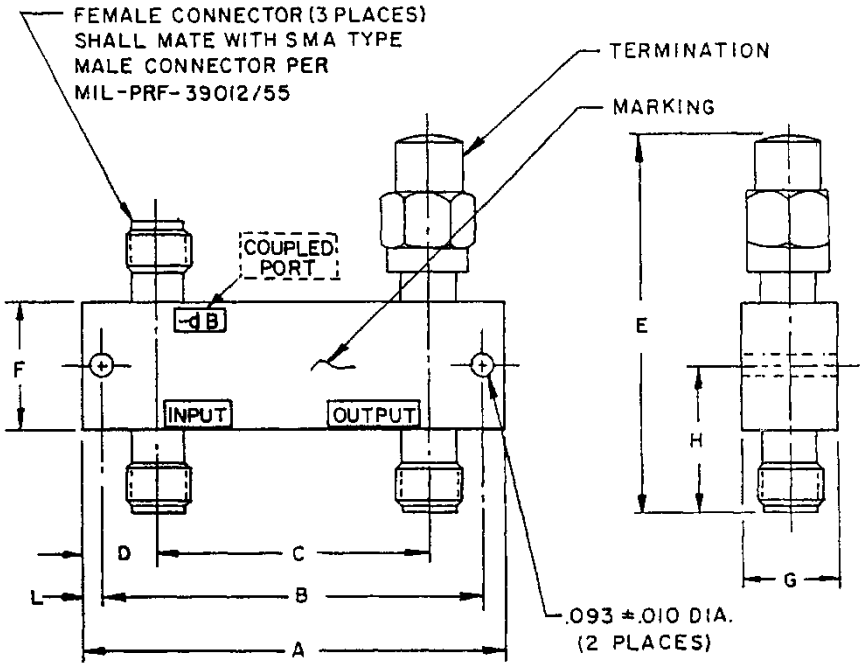

Inches	mm
.010	0.25
.093	2.36

FIGURE 1. Dimensions and configuration for part numbers M15370/10-001 through M15370/10-011, and M15370/10-019.

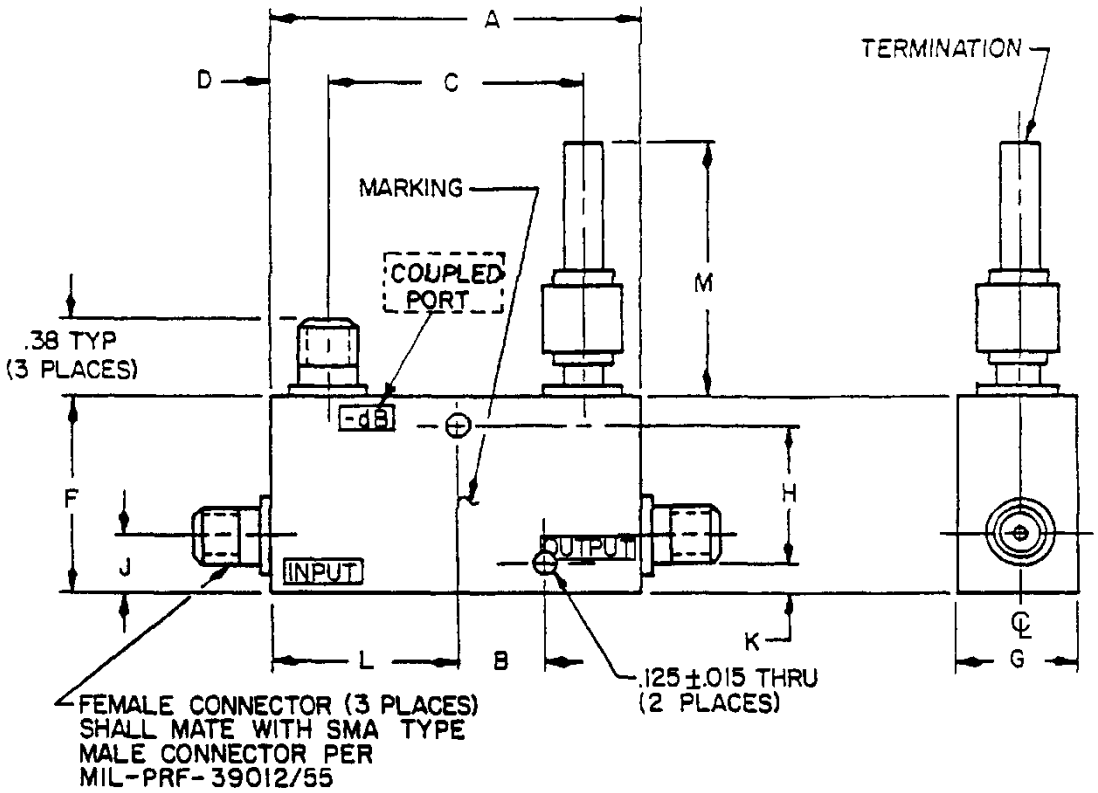

Inches	mm
.015	0.38
.125	3.18
.38	9.65

FIGURE 2. Dimensions and configuration for part number M15370/10-012.

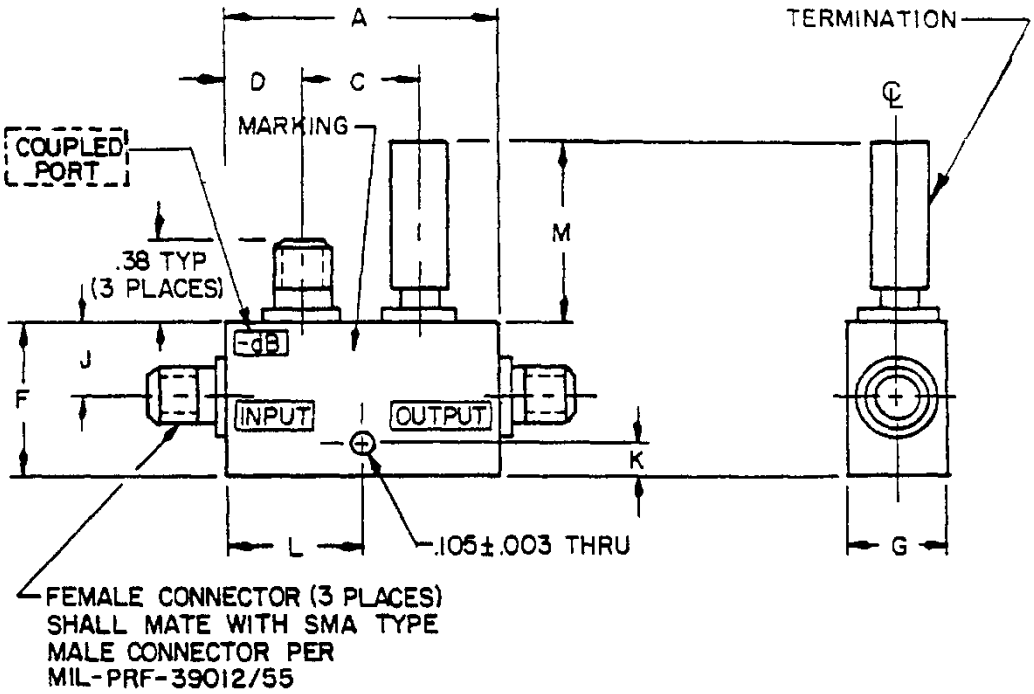

Inches	mm
.003	0.08
.105	2.67
.38	9.65

FIGURE 3. Dimensions and configuration for part numbers M15370/10-013, M15370/10-021, M15370/10-023, and M15370/10-024.

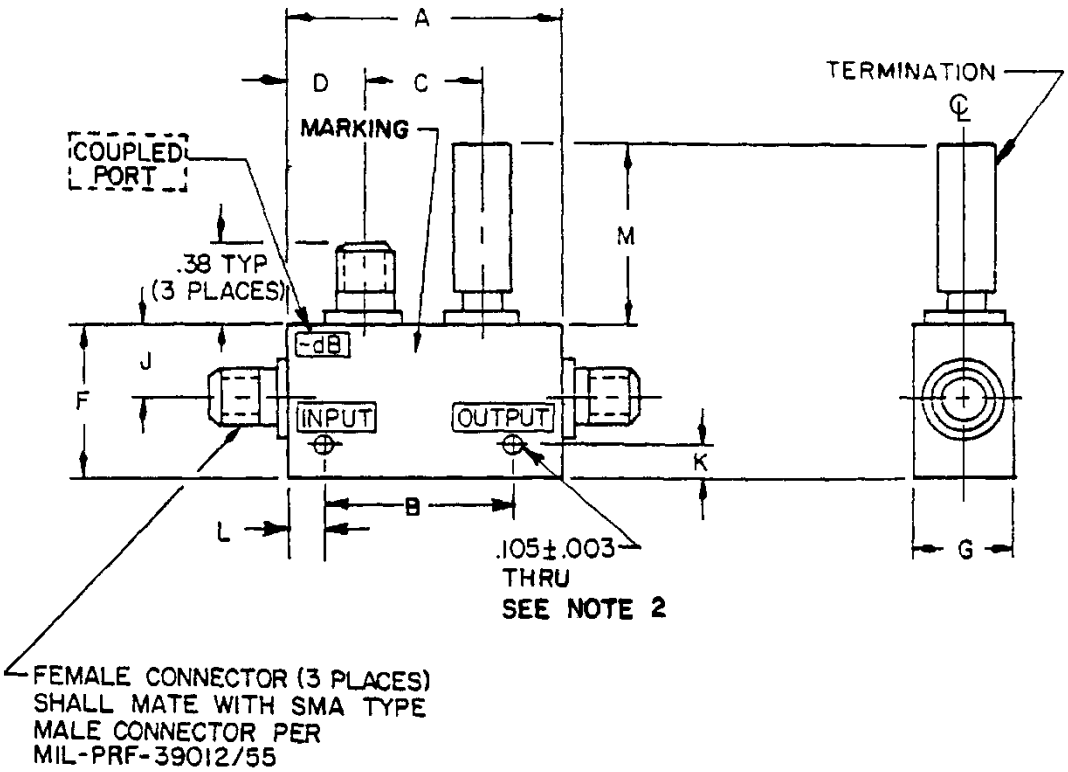

Inches	mm
.003	0.08
.105	2.67
.38	9.7

NOTES:
1. Sealant thickness, .031 maximum for dash numbers M15370/10-016, M15370/10-017, and M15370/10-018.
2. Four mounting holes are permitted, providing they are symmetrical with the two holes shown.

FIGURE 4. Dimensions and configuration for part numbers M15370/10-014 through M15370/10-018, and M15370/10-020.

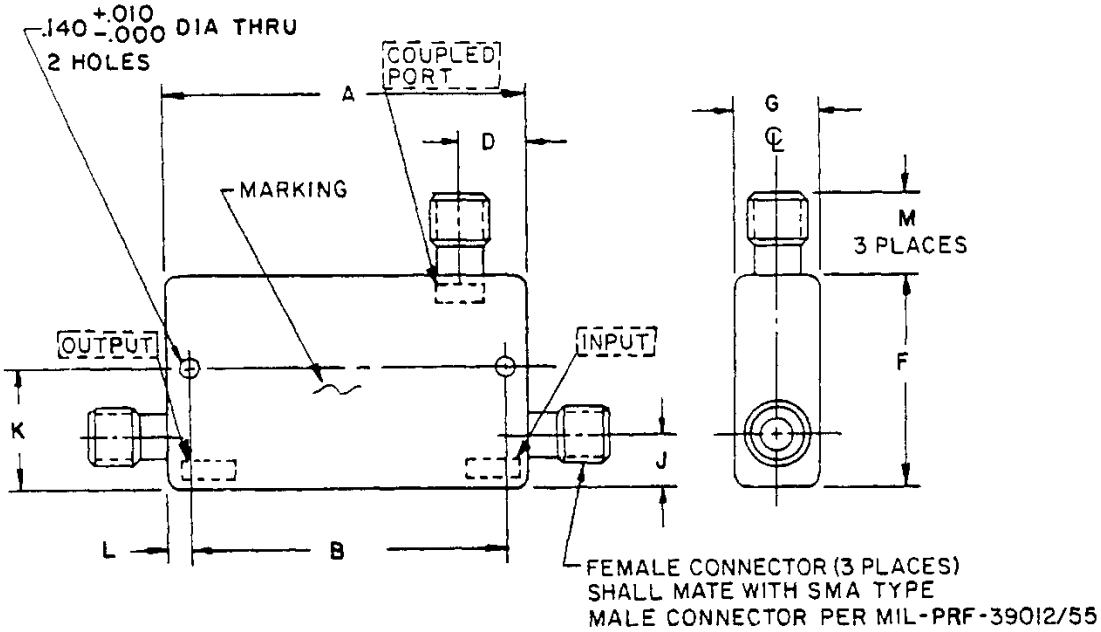

Inches	mm
.010	.25
.140	3.56

NOTES:
1. Dimensions are in inches.
2. Metric equivalents are given for information only.

FIGURE 5. Dimensions and configuration for part numbers M15370/10-022, M15370/10-025, M15370/10-026, and M15370/10-028 through M15370/10-030.

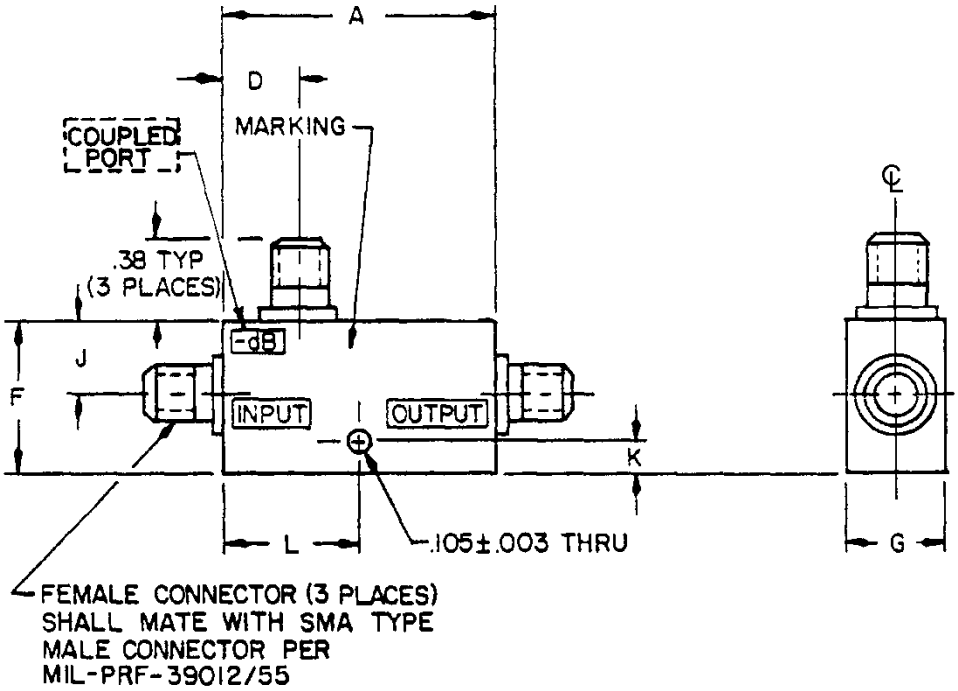

Inches	mm
.003	0.08
.105	2.67
.38	9.7

FIGURE 6. Dimensions and configuration for part number M15370/10-027.

TABLE I. Dimensions and physical requirements.

Dash No.	Mounting configuration (figure)	Dimensions 1/ 2/ 3/												Weight (max)		
		A (max)	B ±.005 (0.13)	C ±.02 (0.51)	D ±.020	E ±.02 (0.51)	F (max)	G (max)	H ±.02 (0.51)	J (max)	K +.010 -.000	L ±.010	M (max)	lbs	g	oz
001	1	3.320 (84.33)	3.130 (79.50)	2.710 (68.83)	.290 (7.37)	1.495 (37.97)	.530 (13.46)	.405 (10.29)	.580 (14.73)	---	---	.080 (2.03)	---	.16	71	2.5
002	1	3.320 (84.33)	3.130 (79.50)	2.710 (68.83)	.290 (7.37)	1.495 (37.97)	.530 (13.46)	.405 (10.29)	.580 (14.73)	---	---	.080 (2.03)	---	.16	71	2.5
003	1	3.320 (84.33)	3.130 (79.50)	2.710 (68.83)	.290 (7.37)	1.495 (37.97)	.530 (13.46)	.405 (10.29)	.580 (14.73)	---	---	.080 (2.03)	---	.16	71	2.5
004	1	2.563 (65.10)	2.391 (60.73)	1.954 (49.63)	.290 (7.37)	1.495 (37.97)	.530 (13.46)	.405 (10.29)	.580 (14.73)	---	---	.080 (2.03)	---	.16	71	2.5
005	1	2.563 (65.10)	2.391 (60.73)	1.954 (49.63)	.290 (7.37)	1.495 (37.97)	.530 (13.46)	.405 (10.29)	.580 (14.73)	---	---	.080 (2.03)	---	.16	71	2.5
006	1	2.563 (65.10)	2.391 (60.73)	1.954 (49.63)	.290 (7.37)	1.495 (37.97)	.530 (13.46)	.405 (10.29)	.580 (14.73)	---	---	.080 (2.03)	---	.16	71	2.5
007	1	1.715 (43.56)	1.525 (38.74)	1.105 (28.07)	.290 (7.37)	1.495 (37.97)	.530 (13.46)	.405 (10.29)	.580 (14.73)	---	---	.080 (2.03)	---	.16	71	2.5
008	1	1.210 (30.73)	1.020 (25.91)	.600 (15.24)	.290 (7.37)	1.495 (37.97)	.530 (13.46)	.405 (10.29)	.580 (14.73)	---	---	.080 (2.03)	---	.06	29	1.02
009	1	1.100 (27.94)	.920 (23.37)	.500 (12.70)	.290 (7.37)	1.620 (41.15)	.655 (16.64)	.405 (10.29)	.642 (16.31)	---	---	.080 (2.03)	---	.06	29	1.02
010	1	1.100 (27.94)	.920 (23.37)	.500 (12.70)	.290 (7.37)	1.620 (41.15)	.655 (16.64)	.405 (10.29)	.642 (16.31)	---	---	.080 (2.03)	---	.06	29	1.02
011	1	1.100 (27.94)	.920 (23.37)	.500 (12.70)	.290 (7.37)	1.620 (41.15)	.655 (16.64)	.405 (10.29)	.642 (16.31)	---	---	.080 (2.03)	---	.06	29	1.02
012	2	1.560 (39.62)	.375 4/ (9.53)	1.090 5/ (27.69)	.220 5/ (5.59)	---	.843 5/ (21.41)	.530 (13.46)	.605 5/ (15.37)	.281 4/ (7.14)	.130 (3.30)	.770 5/ (19.56)	1.380 (35.05)	.16	71	2.5
013	3	1.040 (26.42)	---	.500 5/ (12.70)	.250 5/ (6.35)	---	.843 5/ (21.41)	.415 (10.54)	---	.410 5/ (10.41)	.125 (3.18)	.521 5/ (13.23)	.800 (20.32)	.08	29	1.02
014	4	3.20 (81.3)	1.500 (38.10)	2.700 (68.58)	.270 (6.86)	1.45 (36.8)	.800 (20.32)	.415 (10.54)	---	.585 (14.86)	.080 (2.03)	.800 (20.32)	.650 (16.5)	.46	207	7.3
015	4	3.030 (76.96)	1.000 (25.40)	2.500 (63.50)	.270 (6.86)	1.00 (25.4)	.750 (19.05)	.415 (10.54)	---	.440 (11.17)	.110 (2.79)	1.013 (25.73)	.250 (6.35)	.09	43	1.5
016	4	3.050 (77.47)	1.500 (38.10)	2.520 (64.01)	.270 (6.86)	1.00 (25.4)	.590 (14.99)	.415 (10.54)	---	.340 (8.64)	.110 (2.79)	.790 (20.06)	.470 (11.93)	.09	43	1.5
017	4	3.050 (77.47)	1.750 (44.45)	2.500 (63.50)	.270 (6.86)	1.00 (25.4)	.530 (13.46)	.415 (10.54)	---	.300 (7.62)	.110 (2.79)	.650 (16.51)	.470 (11.94)	.09	43	1.5
018	4	3.050 (77.47)	1.750 (44.45)	2.500 (63.50)	.270 (6.86)	1.00 (25.4)	.530 (13.46)	.415 (10.54)	---	.300 (7.62)	.110 (2.79)	.650 (16.51)	.470 (11.93)	.09	43	1.5
019	1	2.651 (67.34)	2.391 (60.73)	1.969 (50.01)	.385 (9.78)	1.628 (41.35)	.530 (13.46)	.415 (10.54)	.578 (14.68)	---	---	.125 (3.18)	---	.09	43	1.5
020	4	1.200 (30.48)	.340 (8.64)	.660 (16.76)	.270 (6.86)	1.45 (36.8)	.800 (20.32)	.415 (10.54)	---	.585 (14.85)	.080 (2.03)	.410 (10.41)	.650 (16.51)	.46	207	7.3

See footnotes at end of table.

TABLE I. Dimensions and physical requirements - Continued.

Dash Number	Mounting configuration (figure)	Dimensions 1/ 2/ 3/												Weight (max)		
		A (max)	B ±.005 (0.13)	C ±.02 (0.51)	D ±.020	E ±.02 (0.51)	F (max)	G (max)	H ±.02 (0.51)	J (max)	K +.010 -.000	L ±.010	M (max)	lbs	g	oz
021	3	1.04 (26.4)	---	.50 (12.7)	.25 (6.4)	---	.54 (13.7)	.44 (11.2)	---	.30 (7.6)	.110 (2.79)	.520 (13.20)	.75 (19.1)	.04	17	0.60
022	5	2.02 (51.3)	1.75 (44.5)	---	.30 (7.6)	---	1.27 (32.3)	.44 (11.2)	---	.30 (7.6)	.625 (15.87)	.125 (3.18)	.35 (8.9)	.09	43	1.5
023	3	1.04 (26.4)	---	.50 (12.7)	.25 (6.4)	---	.50 (12.7)	.395 (10.0)	---	.30 (7.6)	.093 (2.36)	.507 (12.87)	.06 (1.5)	.19	85	3.0
024	3	1.04 (26.4)	---	.50 (12.7)	.25 (6.4)	---	.54 (13.7)	.395 (10.0)	---	.30 (7.6)	.093 (2.36)	.521 (13.23)	.812 (20.62)	.04	17	0.60
025	5	2.02 (51.3)	1.75 (44.5)	---	.25 (6.4)	2.0 (51.)	1.6 (41.)	.395 (10.0)	---	.30 (7.6)	.625 (15.87)	.125 (3.18)	.40 (10.2)	.09	43	1.5
026	5	2.02 (51.3)	1.75 (44.5)	---	.25 (6.4)	2.0 (51.)	1.6 (41.)	.395 (10.0)	---	.30 (7.6)	.625 (15.87)	.125 (3.18)	.40 (10.2)	.09	43	1.5
027	6	1.04 (25.4)	---	---	.250 (6.35)	---	.50 (12.7)	.395 (10.0)	---	.30 (7.6)	.093 (2.36)	.500 (12.70)	---	.06	28	1.0
028	5	2.02 (51.3)	1.75 (44.5)	---	.35 (8.9)	---	1.27 (32.3)	.44 (11.2)	---	.30 (7.6)	.625 (15.87)	.125 (3.18)	.35 (8.9)	.09	43	1.5
029	5	2.02 (51.3)	1.75 (44.5)	---	.30 (7.6)	---	1.27 (32.3)	.44 (11.2)	---	.30 (7.6)	.625 (15.87)	.125 (3.18)	.35 (8.9)	.09	43	1.5
030	5	2.02 (51.3)	1.75 (44.5)	---	.30 (7.6)	---	1.27 (32.3)	.44 (11.2)	---	.30 (7.6)	.625 (15.87)	.125 (3.18)	.35 (8.9)	.09	43	1.5

1/ Dimensions are in inches.
2/ Metric equivalents are given for general information only.
3/ Metric equivalents are in parentheses.
4/ Tolerance is ± .010 (0.25).
5/ Tolerance is ± .030 (0.76).

TABLE II. Electrical requirements.

Dash number	Frequency range	Coupling (dB)		Coupling variation (dB) max	Effective directivity (dB) min	Insertion loss (dB) max	VSWR max		RF input power to primary			Reflected power (avg) max
		Nominal	Tolerance				Primary line	Secondary line	Over frequency range	Avg	Peak	
	GHz								Watts	Watts	KW	Watts
001	0.5 - 1.0	6	±1.0	±0.6	20	0.2	1.25:1	1.25:1	50	50	0.25	2
002	0.5 - 1.0	10	±1.0	±0.75	20	0.2	1.25:1	1.25:1	50	50	0.25	5
003	0.5 - 1.0	20	±1.0	±1.0	20	0.2	1.25:1	1.25:1	50	50	0.25	50
004	1.0 - 2.0	6	±1.0	±0.5	20	0.2	1.25:1	1.25:1	50	50	0.25	2
005	1.0 - 2.0	10	±1.0	±0.75	20	0.2	1.25:1	1.25:1	50	50	0.25	5
006	1.0 - 2.0	20	±1.0	±1.0	20	0.2	1.20:1	1.20:1	50	50	0.25	50
007	2.0 - 4.0	6	±1.0	±0.5	18	0.2	1.20:1	1.20:1	50	50	0.25	2
008	4.0 - 8.0	6	±1.0	±0.5	18	0.2	1.20:1	1.20:1	50	50	0.25	2
009	8.0 - 12.4	10	±1.0	±0.5	15	0.25	1.30:1	1.30:1	50	50	0.25	2
010	8.0 - 12.4	20	±1.0	±0.75	15	0.25	1.30:1	1.30:1	50	50	0.25	2
011	12.4 - 18.0	6	±1.0	±0.5	12	0.25	1.35:1	1.35:1	50	50	0.25	2
012	7.0 - 11.0	10	±1.0	±0.75	15	0.85	1.25:1	1.25:1	100	100	2.0	10
013	7.0 - 11.0	20	±1.0	±1.0	15	0.40	1.25:1	1.30:1	100	100	2.0	100
014 1/	0.5 - 1.0	10	±1.25	±0.75	25	0.20	1.10:1	1.10:1	50	50	3.0	5
015	0.5 - 1.0	30	±1.0	±0.75	25	0.15	1.10:1	1.10:1	50	50	4.0	50
016	0.5 - 1.0	10	±1.0	±0.75	25	0.2	1.15:1	1.15:1	50	50	3.0	5
017	0.5 - 1.0	20	±1.0	±0.75	25	0.2	1.15:1	1.15:1	50	50	3.0	50
018	0.5 - 1.0	30	±1.0	±0.75	25	0.2	1.15:1	1.15:1	50	50	3.0	50
019	1.5 - 1.9	15	±1.0	±0.75	20	0.2	1.20:1	1.20:1	5	5	2.0	2
020 2/	2.0 - 4.0	6	±1.0	±0.5	20	0.2	1.30:1	1.30:1	50	50	2.0	2

See footnotes at end of table.

TABLE II Electrical requirements - Continued.

Dash number	Frequency range	Coupling (dB)		Coupling variation (dB) max	Effective directivity (dB) min	Insertion loss (dB) max	VSWR max		RF input power to primary			Reflected power (avg) max
		Nominal	Tolerance				Primary line	Secondary line	Over frequency range	Avg	Peak	
	GHz								Watts	Watts	KW	Watts
021	2.6 - 5.2	20	±1.25	±0.75	20	0.25	1.25:1	1.25:1	50	50	3.0	50
022 3/	2.6 - 5.2	20	±1.25	±0.75	20	0.25	1.25:1	1.25:1	50	50	7.5	50
023	4.4 - 5.0	10	±0.45	±0.2	20	0.2	1.25:1	1.25:1	20	20	2	1
024	7.0 - 11.0	6	±1.0	±0.6	17	0.5	1.30:1	1.30:1	50	50	3	2
025	8.75 - 9.65	6	±0.5	±0.3	17	0.3	1.20:1	1.20:1	1	1	1	2
026	8.75 - 9.65	30	±1.0	±0.5	17	0.3	1.20:1	1.20:1	1	1	1	50
027	9.0 - 9.2	20	±0.6	±0.3	18	0.4	1.35:1	1.35:1	50	50	1	20
028 4/	8.0 - 12.4	10	±1.0	±0.5	15	0.3	1.30:1	1.30:1	5	5	5	2
029	8.0 - 12.4	25	±0.5	±0.3	20	0.3	1.25:1	1.25:1	35	35	5	50
030	8.0 - 12.4	30	±1.0	±0.5	20	0.3	1.25:1	1.25:1	35	5	5	50

1/ Inactive for new design, use dash number -002 for new design.
2/ Inactive for new design, use dash number -007 for new design.
3/ Inactive for new design, use dash number -021 for new design.
4/ Inactive for new design, use dash number -009 for new design.

REQUIREMENTS:

Design, construction, and physical dimensions: See figures 1 through 6 and table I.

Operating temperature range:

-54°C to +85°C for dash numbers 022 through 028.
-55°C to +100°C for dash numbers 014 and 020.
-54°C to +110°C for dash numbers 001 through 013, 015 through 019, 021, 023 through 027, 029, and 030.

Weight: See table I.

Electrical: See table II.

Marking: Part number (see tables I and II) shall be located as shown on figures 1 through 6.

Part number: M15370/10- (and a dash number from table I).

Referenced Documents: In addition to MIL-DTL-15370, this document references the following:
MIL-PRF-39012/55

The margins of this specification are marked with vertical lines to indicate where modifications from this revision were made. This was done as a convenience only and the Government assumes no liability whatsoever for any inaccuracies in these notations. Bidders and contractors are cautioned to evaluate the requirements of this document based on the entire content irrespective of the marginal notations.

Custodians:
Army - CR
Navy - EC
Air Force - 85
DLA - CC

Preparing activity:
DLA - CC
(Project 5985-2012-035)

Review activities:
Navy - AS, CG, MC, OS, SH
Air Force - 99

NOTE: The activities listed above were interested in this document as of the date of this document. Since organizations and responsibilities can change, you should verify the currency of the information above using the ASSIST Online database at https://assist.dla.mil/.