INCH-POUND
MIL-DTL-15109D
w/Amendment 1
7 November 2013
SUPERSEDING
MIL-DTL-15109D
14 June 2001

DETAIL SPECIFICATION

RESISTORS AND RHEOSTATS, NAVAL SHIPBOARD

This specification is approved for use by all Departments
and Agencies of the Department of Defense.

1. SCOPE

1.1 Scope. This specification covers Class III shockproof resistors and rheostats for Naval shipboard service.

1.2 Classification. Resistors and rheostats of the following forms, as specified (see 6.2):

Resistors:
- Form EW - Exposed wire or ribbon
- Form IW - Embedded wire or ribbon
- Form G - Grids or strips
- Form R - Ribbon

Rheostats:
- Form EW - Exposed wire or ribbon
- Form P - Plate

2. APPLICABLE DOCUMENTS

2.1 General. The documents listed in this section are specified in sections 3, 4 and 5 of this specification. This section does not include documents cited in other sections of this specification or recommended for additional information or as examples. While every effort has been made to ensure the completeness of this list, document users are cautioned that they must meet all specified requirements documents cited in sections 3, 4 and 5 of this specification, whether or not they are listed.

2.2 Government documents.

2.2.1 Specifications, standards, and handbooks. The following specifications, standards, and handbooks form a part of this document to the extent specified herein. Unless otherwise specified, the issues of these documents are those cited in the solicitation (see 6.2).

DEPARTMENT OF DEFENSE SPECIFICATION

MIL-S-901	-	Shock Tests, H.I. (High-Impact); Shipboard Machinery, Equipment and Systems, Requirements for
MIL-E-917	-	Electric Power Equipment Basic Requirements

Comments, suggestions, or questions on this document should be addressed to: DLA Land and Maritime, ATTN: VAT, Post Office Box 3990, Columbus, Ohio 43218-3990 or by email Resistor@dla.mil. Since contact information can change, you may want to verify the currency of this address information using the ASSIST Online database at https://assist.dla.mil/.

DEPARTMENT OF DEFENSE STANDARDS

MIL-STD-167-1	-	Mechanical Vibrations of Shipboard Equipment (Type I - Environmental and Type II - Internally Excited)

(Copies of these documents are available online at http://quicksearch.dla.mil or from the DLA Document Services, 700 Robbins Avenue, Building 4D, Philadelphia, PA 19111-5094).

2.3 Non-Government publications. The following documents form a part of this document to the extent specified herein. Unless otherwise specified, the issues of the documents cited in the solicitation or contract (see 6.2).

AMERICAN SOCIETY FOR TESTING AND MATERIALS (ASTM)

ASTM B117	-	Standard Practice for Operating Salt Spray (Fog) Apparatus (DOD adopted)

(Copies of these documents can be obtained online at http://www.astm.org/ or by contacting ASTM International, P.O. Box C700, 100 Barr Harbor Drive, West Conshohocken, PA, 19428-2959).

NATIONAL ELECTRICAL MANUFACTURERS ASSOCIATION (NEMA)

NEMA ICS 1	-	Industrial Control and Systems, General Requirements

(Copies of this document may be purchased from the National Electrical Manufacturers Association, 1300 North 17th Street, Suite 1847, Rosslyn, Virginia, United States, 22209. http://www.nema.org/)

2.4 Order of precedence. Unless otherwise noted herein or in the contract, in the event of a conflict between the text of this document and the references cited herein (except for related specification sheets), the text of this document takes precedence unless otherwise noted. Nothing in this document, however, supersedes applicable laws and regulations unless a specific exemption has been obtained.

3. REQUIREMENTS

3.1 Qualification. Resistors and rheostats furnished under this specification shall be products which are authorized by the qualifying activity for listing on the applicable qualified products list at the time of award of contract (see 4.2 and 6.3).

3.2 General requirements. Resistors and rheostats shall conform to MIL-E-917 and NEMA ICS 1 as specified herein.

3.2.1 Total resistance and tolerance. The total resistance of resistors and rheostats shall not differ from the design value by more than 10 percent. A variation of 20 percent will be permitted from the design values of any step or section.

3.2.2 Resistance value deviations. All maximum deviations as specified in this section are to be considered absolute limits with the exception of the contact resistance adjustment.

3.3 Characteristics. Resistors and rheostats shall have the following characteristics, as specified (see 6.2f).

3.3.1 Voltage. Resistors and rheostats shall be designed for a maximum circuit voltage of 150, 300 or 600 volts alternating current (ac) root mean square (rms) or direct current (dc) (see 6.2g).

3.3.2 Mounting. Resistor assemblies and rheostats shall be constructed for bulkhead, deck, or switchboard mounting, as specified. Individual resistor units shall be furnished with mounting brackets, mounting bolts for single-end mounting, or without mounting hardware, as specified (see 6.2h).

3.3.3 Duty. Unless otherwise specified, resistors and rheostats shall be constructed for continuous duty. If other duty, in the case of resistor applications, is required, NEMA ICS 1 standards for the specified duty shall apply (see 6.2i).

3.3.4 Ambient temperature. Unless otherwise specified (see 6.2), resistors and rheostats shall be constructed for a 50 degrees Celsius (^{O}C) ambient. Where the normal temperature of the surrounding atmosphere exceeds 50°C, the rating shall be based on the specified ambient (see 6.2j).

3.3.5 Enclosures. Enclosures shall be open or drip proof, as specified (see 6.2k). Enclosures shall be furnished for resistors only when specified. If not specified, drip proof enclosures shall be furnished for bulkhead mounted rheostats and open enclosures for switchboard mounted rheostats. Drip proof enclosures shall meet requirements of NEMA ICS 1 when inclined to any angle not greater than 45 degrees from the normal position and conform to the requirements of 3.5.4.

3.3.6 Temperature rise. Temperature rises shall not exceed the values specified in NEMA ICS 1.

3.4 Construction.

3.4.1 Internal connections. Connections that are embedded in resistors and rheostats shall be soldered, welded, or brazed. Low melting solders that would be adversely affected by the operating temperature of the resistor or rheostat shall not be used. Connections shall be mechanically secure and electrically continuous. External connections to the resistors or rheostat shall be so that the heat from the resistor will not adversely affect the connection.

3.4.2 Rheostats. Rheostats shall be constructed to ensure reliable operation under severe service. Springs shall not be stressed near or beyond their fatigue limits. Springs shall not carry current. Exposed metallic parts, other than terminals of plate type rheostats, shall be grounded. Two-terminal type rheostats shall be so connected internally that chatter under vibration or shock will not cause an open circuit. Rheostats shall be so arranged that speed, voltage, or other function being controlled is increased will clockwise rotation of the hand wheel. Dual purpose rheostats shall increase speed with clockwise rotation and increase voltage with counter-clockwise rotation.

3.4.2.1 Brushes. The sliding brushes of plate type rheostats shall be easily renewable and so constructed as not to be blocked by slight projections on the fixed contact buttons.

3.4.2.2 Remote operation. When remote operation is required, a motor-driven operating mechanism shall be provided consisting of the motor, gearing, limit switches, necessary shafting, and connections. An emergency manual operating feature shall be provided.

3.4.2.3 Interpolating. When interpolating rheostats (see 6.5.5) are required to obtain the necessary fineness of control, the resistance of the interpolating plate shall be not less than the three steps of the main plate, having the highest ohmic value. The ohms per step shall not exceed 0.4 percent of the total resistance of the main plate.

3.4.2.4 Interchangeability. In no case shall parts be physically interchangeable or reversible unless such parts are also interchangeable or reversible with regard to function, performance and strength.

3.4.3 Pure tin. The use of pure tin, as an underplate or final finish, is prohibited both internally and externally. Tin content of resistor components and solder shall not exceed 97 percent, by mass. Tin shall be alloyed with a minimum of 3 percent lead, by mass (see 6.4).

3.5 Operational requirements.

3.5.1 Life. Resistors and rheostats shall be capable of withstanding the required electrical and mechanical life tests without a resistance change in excess of 10 percent (see 4.5.8).

3.5.1.1 Electrical life. Continuously rated resistors and rheostats shall withstand 100 cycles of operation at 125 percent of the continuous duty wattage rating of the resistor or rheostat. Each cycle shall consist of 2 hours “on” and 2 hours “off”. Intermittently rated devices shall withstand 100 cycles of operation at 125 percent of the intermittent duty watt rating for the duty cycle specified.

3.5.1.2 Mechanical life. Rheostats, mechanically operated or motor driven, shall withstand 25,000 cycles of operation at rated load. Each operation shall cover at least 90 percent of the movement possible.

3.5.2 Salt spray. Resistors and rheostats shall withstand exposure to salt spray (see 4.5.9). The change in resistance shall not exceed 25 percent.

3.5.3 Vibration. Resistors and rheostats shall withstand type I vibration tests of MIL-STD-167-1, without mechanical damage or malfunctioning (see 4.5.10).

3.5.4 Shock. Resistors and rheostats shall withstand the shock tests specified in MIL-S-901 (see 4.5.11).

3.5.5 Insulation resistance. Insulation resistance, after completion of the electrical life and vibration tests, shall be not less than 50 megohms for resistors and 5 megohms for rheostats. (see 4.5.12)

3.6 Identification and information plates. Rheostats and resistors or rheostat assemblies shall be provided with an identification plate containing the manufacturer’s name and catalog number, voltage, maximum and minimum amperes and ohms. Plates shall be brass or corrosion-resistant steel marked by etching, engraving, or stamping not less than 0.003 inch deep. Alternate methods of marking individual resistors shall be approved by the Command or agency concerned. Such marking shall contain the manufacturer’s name or trademark, ohms, and watts.

3.7 Recycled, recovered, or environmentally preferable materials. Recycled, recovered, or environmentally preferable materials should be used to the maximum extent possible provided that the material meets or exceeds the operational and maintenance requirements, and promotes economically advantageous life cycle costs.

3.8 Workmanship. Resistors shall be processed in such a manner as to be uniform in quality and shall be free from cracked or displaced parts, sharp edges, burrs, and other defects which will affect life, serviceability, or appearance.

4. VERIFICATION

4.1 Classification of inspections. The inspection requirements specified herein are classified as follows:

a. Qualification inspection (see 4.2).
b. Retention of qualification inspection (see 4.3).
c. Conformance inspection (see 4.4).

4.2 Qualification inspection. Qualification inspection shall consist of the applicable examination and tests of table I. Inspection shall be conducted at a laboratory satisfactory to the qualifying activity.

4.2.1 Number of samples. Three resistors or rheostats of each size and wattage shall be furnished. Minimum, median, and maximum resistance values shall be represented.

4.3 Retention of qualification. Every 12 months, one resistor and rheostat of each size and wattage shall be subjected to the retention of qualification inspection specified in table I. In the event that qualification tests are made on preproduction units, the first retention of qualification inspection shall be made on samples from the first production run. It is not required for the tests to be conducted on more than 1 out of 50 resistors or rheostats of a given design manufactured over a period of 3 years.

4.4 Conformance inspection. Each resistor and rheostat shall be subjected to the conformance inspection specified in table I. If this inspection reveals variations beyond normal manufacturing tolerances, the Government may require that any portion, or all of the retention of qualification inspections be repeated to demonstrate conformance with this specification.

TABLE I. Qualification, retention, and conformance inspections.

Description and order of tests	Requirement	Test method	Qualification Inspection	Retention of qualification	Conformance inspection
Examination	3.2	4.5.1	X	X	X
Weight		4.5.2	X	X	
Electrical creepage and clearance		4.5.3	X	X	
Resistance	3.2.1	4.5.4	X	X	X
General operation		4.5.5	X	X	X
Enclosures	3.3.5	4.5.6	X	X	
Temperature rise	3.3.6	4.5.7	X	X	
Life	3.5.1	4.5.8	X		
Vibration	3.5.3	4.5.10	X		
Insulation resistance	3.5.5	4.5.12	X	X	
Dielectric		4.5.13	X	X	X
Shock	3.5.4	4.5.11	X	X	
Salt spray	3.5.2	4.5.9	X		

4.5 Test methods.

4.5.1 Examination. Each resistor or rheostat shall be subjected to examination to ascertain that the fit, materials and workmanship conform to this specification.

4.5.2 Weight. The weight of the equipment shall be taken and recorded. The weight shall not differ from the design value by more than 10 percent.

4.5.3 Electrical creepage and clearance distances. Electrical creepage and clearance distances shall be demonstrated by actual measurement to be in accordance with MIL-E-917.

4.5.4 Resistance. The overall resistance of resistors and rheostats shall be measured to determine that they are within ±10 percent of the design values. The temperature at which resistance readings are taken shall be recorded.

4.5.5 General operation. General operation shall include any tests necessary to ascertain that the required operating requirements have been met.

4.5.6 Enclosures. No tests are required. Drip proof enclosures shall be given an examination to determine that falling moisture or dirt will not interfere with the mechanical or electrical operation of the equipment enclosed when inclined to any angle not exceeding 45 degrees from the vertical.

4.5.7 Temperature rise. The test methods to be employed and the precautions to be observed in conducting temperature rise tests shall be in accordance with NEMA ICS 1 and the following:

4.5.7.1 General. Temperature rise tests shall be made under conditions equivalent to normal operating conditions at rated voltage, frequency load, and the duty specified to determine that the rises specified in 3.3.6 are not exceeded.

4.5.7.2 Ambient temperature. Resistors and rheostats shall be tested at any convenient room temperature above 10°C, but whatever the value of this ambient temperature, the maximum permissible temperature rises specified herein shall not be exceeded.

4.5.7.3 Ambient measurement. The ambient temperature shall be measured by means of two or more thermometers placed at different points around and on a level with the resistor or rheostat and at a distance of 3 to 6 feet therefrom. The thermometers shall be inserted in oil filled cups not less than 1 inch in external diameter and 2 inches high, and shall be protected from drafts and from heat radiation from the item under test or from outside sources. The value to be adopted for the room temperature during the test shall be the mean of the readings of the several thermometers, placed as stated, taken at four equal intervals of time during the last quarter of the duration of the test. The resistor or rheostat under test shall be protected from drafts and from heat radiation from outside sources.

4.5.7.4 Ambient variations. A variation of more than 10°C, during a period of 6 hours, or a proportional change for runs of shorter duration, shall not be permitted. If the ambient variations are excessive or if the ambient changes rapidly at the end, the test shall be repeated.

4.5.7.5 Starting temperature. Temperature rise tests shall not be started if the ambient differs more than 5°C from the ambient where the equipment has stood during the preceding 2 hours.

4.5.8 Life. Life tests shall be as specified in 3.5.1. The resistance of the resistor or rheostat shall be measured and recorded at the end of the tests.

4.5.9 Salt spray. Resistors and rheostats shall be exposed to 4 hours of salt spray in accordance with ASTM B117, washed in tap water, external surfaces dried and the resistance measured immediately. After completion of this 4-hour test, resistors and rheostats shall be exposed to 100 hours of salt spray in accordance with ASTM B117. The condition of the finish shall be recorded at the end of this test (see 3.5.2).

4.5.10 Vibration. Resistors and rheostats shall be subjected to the vibration tests specified in MIL-STD-167-1, type I tests, under load. Rheostats shall be adjusted to approximately the mid-position. Operation shall be checked at each frequency of vibration (see 3.5.3).

4.5.11 Shock. Shock tests shall be conducted under load. Rheostats shall be adjusted to approximately the mid-position (see 3.5.4). MIL-S-901 and the following apply:

4.5.11.1 Method of mounting.

4.5.11.1.1 Resistors. Standard mounting for electrical controller components (contacts, relays, resistors, and so forth) type C lightweight equipment figure of MIL-S-901 shall be used for individual resistors or sub-assemblies. The number of resistors to be tested at one time shall depend on the size of the panel and the condition that there be sufficient clearance between adjacent resistors to prevent impact between samples under shock. Individual resistors shall be supported at one end, mounted on brackets supplied by the manufacturer or mounted on sharp-edge L-shaped brackets of at least 0.094 inch thickness or heavier, as necessary, to prevent bracket distortion under shock. The choice of brackets is dependent upon the manner in which the resistors are normally mounted. Standard mounting for bulkhead mounted equipment type A test lightweight equipment figure of MIL-S-901 shall be used for resistor assembly's intended for bulkhead mounting.

4.5.11.1.2 Rheostats. Standard mounting for bulkhead mounted equipment type A test lightweight equipment figure of MIL-S-901 shall be used for bulkhead mounted rheostats. Standard mounting for electrical indicating switchboard instruments and other panel mounted equipment type C test light weight equipment figure of MIL-S-901 shall be used for switchboard mounted rheostats. Figure 1, herein, shall be used for double end mounted, multi-plate rheostats.

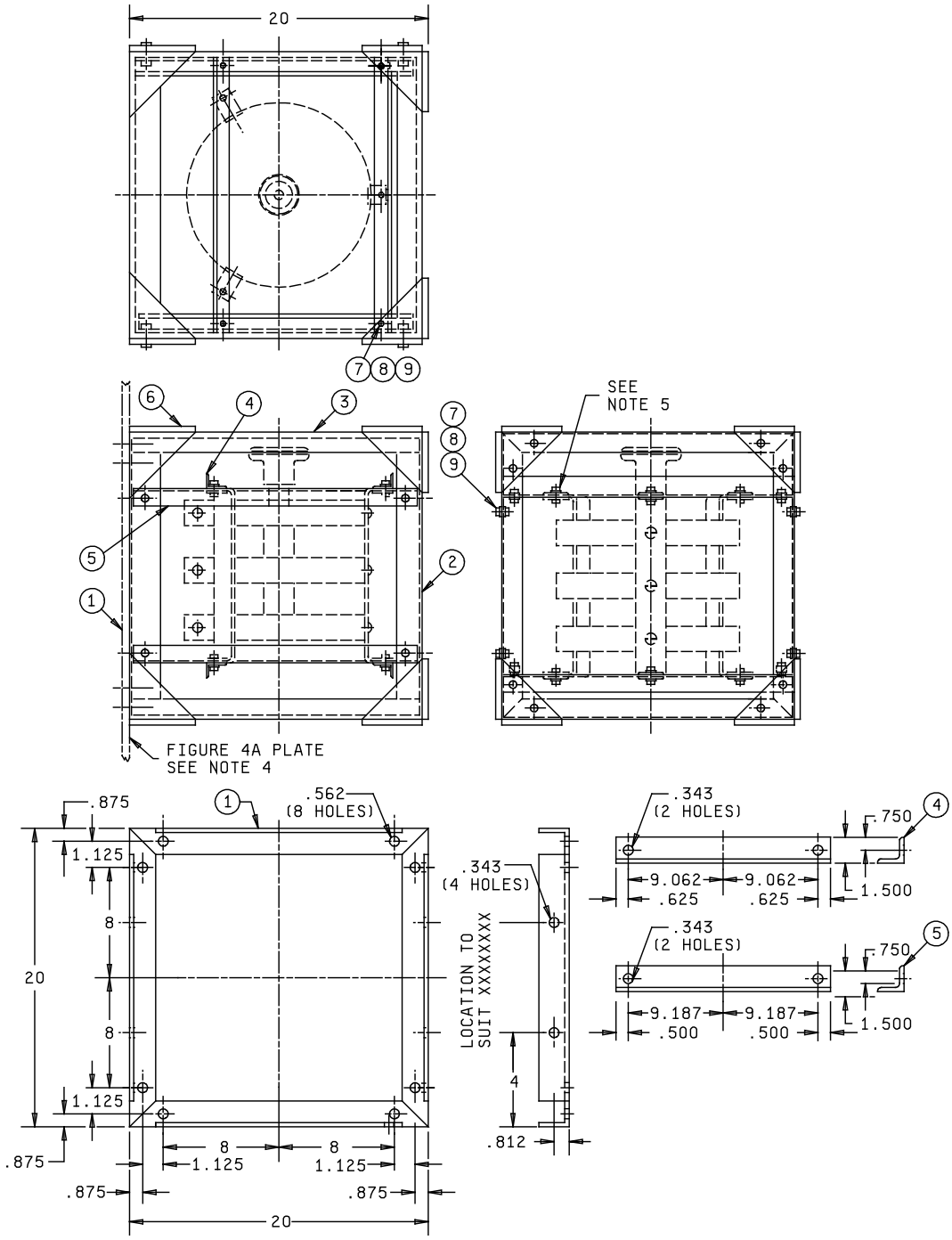

FIGURE 1. Standard mounting for shock testing double end supported multi-deck plate type rheostats, type A test - lightweight equipment.

NOTES:
1. Piece 2 is to be the same as piece 1, except omit (6) 9/16 inch holes.
2. Locate and drill 11/32 inch holes in pieces 4 and 5 to suit rheostat.
3. Utilize welded construction 3/16 inch fillet weld.
4. Mounting to be secured directly to figure 4A test panel of MIL-S-901.
5. Rheostat mounting bolts and any associated bushings are to be supplied with the rheostat.

List of Materials 1/				
Piece	Description	Dimensions 2/	Required	Material
1	Frame	1-1/2 X 1-1/2 X 3/16 3/	1	STEEL
2			1	
3	Angle	1-1/2 X 1-1/2 X 19-5/8	4	
4		1-1/2 X 1-1/2 X 19-3/8	4	
5			4	
6	Gusset plate	4 X 4 X 3/16	20	
7	Bolt	5/16-18 X 1 HX HD	16	
8	Nut	5/16-18 HX HD	16	
9	Washer	3/8 ID X 7/8 OD	32	

1/ Quantities are for one mounting.
2/ Dimensions are in inches.
3/ As view from end.

FIGURE 1. Standard mounting for shock testing double end supported multi-deck plate type rheostats, type A test - lightweight equipment - Continued.

4.5.11.2 Definition of failure. Definition of failure shall be as follows:

a. Breakage or appreciable distortion of any parts, including mounting bolts.

b. Mechanical malfunctioning of rheostats. Movement of the contact arm more than 10 percent of its total travel in any one blow when tested with the contact arm in any intermediate position.

c. Low insulation resistance. After shock tests (see 3.5.4), the insulation resistance shall conform to 3.5.5.

d. Low dielectric strength. After shock tests (see 3.5.4), the dielectric test shall be conducted at a voltage equal to 65 percent of the voltage required by 4.5.13.

e. Failure to pass inspection. Following checks (a) through (d) above, the equipment shall be disassembled to the point necessary to ascertain its condition and examined for damage. Any observed effects of shock shall be recorded.

4.5.12 Insulation resistance. Insulation resistance shall be as specified in 3.5.5. The measurement shall be made with an insulation-resistance-indicating meter with a full scale reading of 100 or 200 megohms, an open circuit voltage of 500 volts and a voltage of at least 450 volts across a resistance of 1 megohm. The temperature shall be measured and recorded. Insulation resistance tests shall be made after the device has cooled to room temperature and as soon as practicable after completion of electric life and vibration tests. The relative humidity shall be measured and recorded.

4.5.13 Dielectric. Dielectric tests shall be conducted in accordance with NEMA ICS 1. The tests shall be made upon the completely assembled items after completion of all tests except the shock test.

5. PACKAGING

5.1 Packaging. For acquisition purposes, the packaging requirements shall be as specified in the contract or order (see 6.2). When actual packaging of materiel is to be performed by DOD personnel, these personnel need to contact the responsible packaging activity to ascertain requisite packaging requirements. Packaging requirements are maintained by the Inventory Control Point's packaging activity within the Military Department or Defense Agency, or within the Military Department's System Command. Packaging data retrieval is available from the managing Military Departments or Defense Agency's automated packaging files, CD-ROM products, or by contacting the responsible packaging activity.

6. NOTES

(This section contains information of a general or explanatory nature that may be helpful, but is not mandatory.)

6.1 Intended use. The class HI resistors and rheostats are intended for use for Naval shipboard service.

6.2 Acquisition requirements . Acquisition documents must specify the following:

a. Title, number, and date of this specification.

b. Unless otherwise specified (see 2.1), the versions of the individual documents referenced will be those in effect on the date of release of the solicitation.

c. Application.

d. Quantity required.

e. Form required (see 1.2).

f. Rating (watts or summation watts, ohms, amperes and characteristics) (see 3.3).

g. Voltage (see 3.3.1).

h. Mounting (see 3.3.2).

i. Duty (see 3.3.3).

j. Ambient temperature (see 3.3.4).

k. Enclosure (see 3.3.5).

l. Packaging requirements (see 5.1).

m. Taper (see 6.5.3).

6.3 Qualification. With respect to products requiring qualification, awards will be made only for products which are, at the time of award of contract, qualified for inclusion in Qualified Product List 15109 whether or not such products have actually been so listed by that date. The attention of the contractors is called to these requirements, and manufacturers are urged to arrange to have the products that they propose to offer to the Federal Government tested for qualification in order that they may be eligible to be awarded contracts or purchase orders for the products covered by this specification. The activity responsible for the QPL and information pertaining to qualification of products may be obtained from DLA Land and Maritime, ATTN: VQP, Post Office Box 3990, Columbus, OH 43218-3990. An online listing of products qualified to this specification may be found in the Qualified Products Database (QPD) at https://assist.dla.mil or http://www.landandmaritime.dla.mil/Programs/QmlQpl/.

6.4 Tin whisker growth. The use of alloys with tin content greater than 97 percent, by mass, may exhibit tin whisker growth problems after manufacture. Tin whiskers may occur anytime from a day to years after manufacture and can develop under typical operating conditions, on products that use such materials. Conformal coatings applied over top of a whisker-prone surface will not prevent the formation of tin whiskers. Alloys of 3 percent lead, by mass, have shown to inhibit the growth of tin whiskers. For additional information on this matter, refer to ASTM-B545 (Standard Specification for Electrodeposited Coatings of Tin).

6.5 Definitions. The following definitions apply to terms used in this specification.

6.5.1 Minimum current rating. Minimum current rating is the current a rheostat can carry without exceeding the temperature limits of this specification when the entire resistance element is in the circuit.

6.5.2 Maximum current rating. Maximum current rating is the current a rheostat can carry without exceeding the temperature limits of this specification when only one step of resistance is in the circuit.

6.5.3 Current taper. Current taper is the ratio of maximum current rating to minimum current rating of a rheostat.

6.5.4 Sigma (Summation) watts. Sigma watts is the product of the maximum current rating, the minimum current rating, and resistance of a rheostat.

6.5.5 Vernier (interpolating) rheostat. A vernier rheostat is a rheostat that, in addition to one or more main plates, has an interpolating plate controlled by a separate knob or handwheel on a shaft concentric to the operating shaft of the main plates.

6.6 Sub-contracted material and parts. The packaging requirements of referenced documents listed in section 2 do not apply when material and parts are acquired by the contractor for incorporation into the equipment and lose their separate identity when the equipment is shipped.

6.7 Provisioning. Provisioning Technical Documentation (PTD), spare parts, and repair parts should be furnished as specified in the contract.

6.7.1 Spare or repair parts. When ordering spare parts or repair parts for the equipment covered by this specification, the contract should state that such spare parts and repair parts should meet the same requirements and quality assurance provisions as the parts used in the manufacture of the equipment. Packaging for such parts should also be specified.

6.8 Subject term (key word) listing.

Circuit voltage
Interpolating plate
Sliding brush

6.9 Environmentally preferable material. Environmentally preferable materials should be used to the maximum extent possible to meet the requirements of this specification. As of the dating of this document, the U.S. Environmental Protection Agency (EPA) is focusing efforts on reducing 31 priority chemicals. The list of chemicals and additional information is available on their website http://www.epa.gov/osw/hazard/wastemin/priority.htm. Use of these materials should be minimized or eliminated unless needed to meet the requirements specified herein (see Section 3).

6.10 Amendment notification. The margins of this specification are marked with vertical lines to indicate modification generated by this amendment. This was done as a convenience only and the Government assumes no liability whatsoever for any inaccuracies in these notations. Bidders and contractors are cautioned to evaluate the requirements of this document based on the entire content irrespective of the marginal notations and relationship.

Custodians:
Navy - SH
DLA - CC

Review activities:
Navy - AS

Preparing activity:
DLA - CC

(Project 5905-2013-006)

NOTE: The activities listed above were interested in this document as of the date of this document. Since organizations and responsibilities can change, you should verify the currency of the information above using the ASSIST Online database at https://assist.dla.mil.