INCH-POUND
MS51114D
10 March 2008
SUPERSEDING
MS51114C
06 June 1973

DETAIL SPECIFICATION SHEET

COIL, IGNITION-24 VOLT DC (WITH INTERNAL BALLAST)

Inactive for new design after 31 October 2003.

This specification is approved for use by all Departments and Agencies of the Department of Defense.

The requirements for acquiring the product described herein shall consist of this specification sheet and MIL-D-13791.

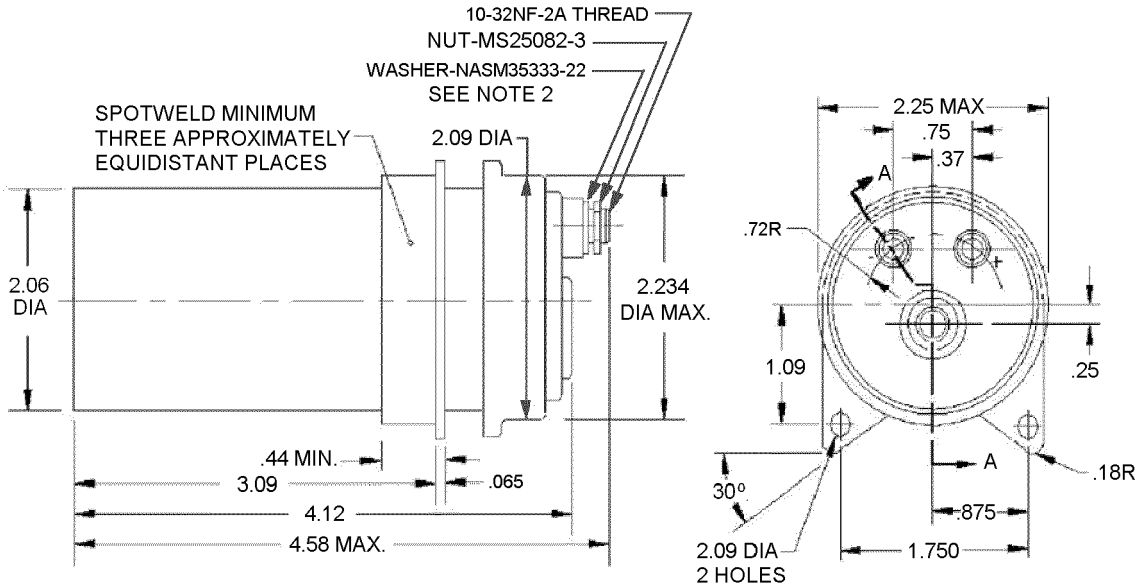

FIGURE 1. Coil, ignition dimensions and configurations.

AMSC N/A

FSC 2920

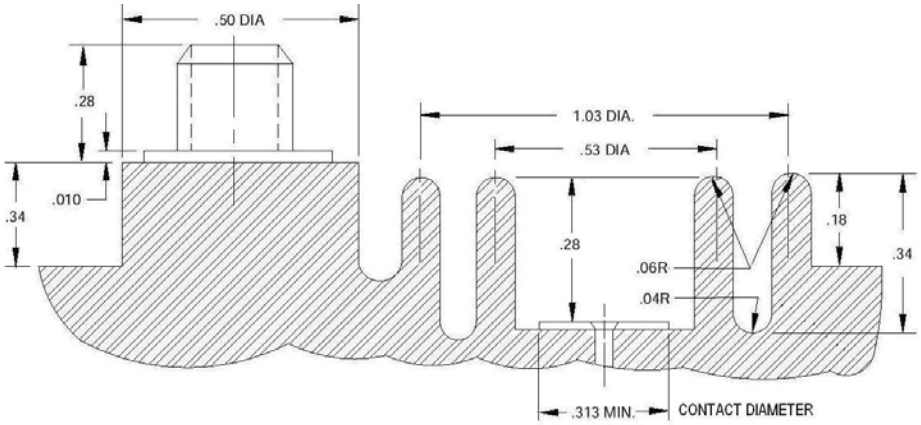

VIEW –A-A

Inches	mm	Inches	mm
.010	0.25	.53	13.5
.04	0.07	.72	18.3
.06	1.5	.75	19.0
.065	1.65	.875	22.22
.18	4.6	1.03	26.2
.209	5.31	1.09	27.7
.25	6.35	1.750	44.45
.28	7.11	2.06	52.3
.313	7.950	2.09	53.1
.34	8.64	2.234	56.74
.37	9.40	2.25	57.1
.44	11.2	3.09	78.5
.50	12.7	4.12	104.6

NOTES:

1. This epoxy potted coil contains an internal ballast resistance in series with the primary winding and is designed for use in distributors conforming to referenced specification.
2. Manufacturer's design will be acceptable in place of washer in accordance with NASM35333 if interchangeability and function are not affected.
3. Dimensions are in inches. Metric equivalents are given for information only. Unless otherwise specified, tolerances are: ± .01 on 2 place decimals, ± 2° on angles, and ± .005 on 3 place decimals.
4. Threads shall be in accordance with screw thread standards ASME B1.1 or FED-STD-H28.
5. For design feature purposes this standard takes precedence over procurement documents referenced herein.
6. Reference documents shall be of the issue in effect on date of invitation for bid.
7. Marking – Terminal polarity shall be clearly and permanently identified adjacent to the terminal. The MS Part or Identifying Number (PIN). Manufacturers Identification - voltage rating - shall be applied to the part in accordance with MIL-STD-130.
8. This standard is not intended to limit construction other than as shown hereon by dimensions, notations and referenced documents.

FIGURE 1. Coil, ignition dimensions and configurations - Continued.

Changes from previous issue. Marginal notations are not used in this revision to identify changes with respect to the previous issue due to the extent of the changes.

Referenced documents. In addition to MIL-D-13791, this document references the following:

ASME B1.1
FED-STD-H28
MIL-STD-130
NASM35333

CONCLUDING MATERIAL

Custodians:
Army - AT
Navy - SH
DLA – CC

Preparing activity:
DLA - CC

Review activities:
Navy - MC, SA

(Project 2920-2007-003)

NOTE: The activities listed above were interested in this document as of the date of this document. Since organizations and responsibilities can change, you should verify the currency of the information above using the ASSIST Online database at http://assist.daps.dla.mil.