INCH-POUND

MIL-DTL-13791/15A
31 March 2016
SUPERSEDING
MIL-DTL-13791/15
15 January 2009

DETAIL SPECIFICATION SHEET

ROTOR ASSEMBLY

This specification is approved for use by all Departments and Agencies of the Department of Defense.

The requirements for acquiring the product described herein shall consist of this specification sheet and MIL-DTL-13791.

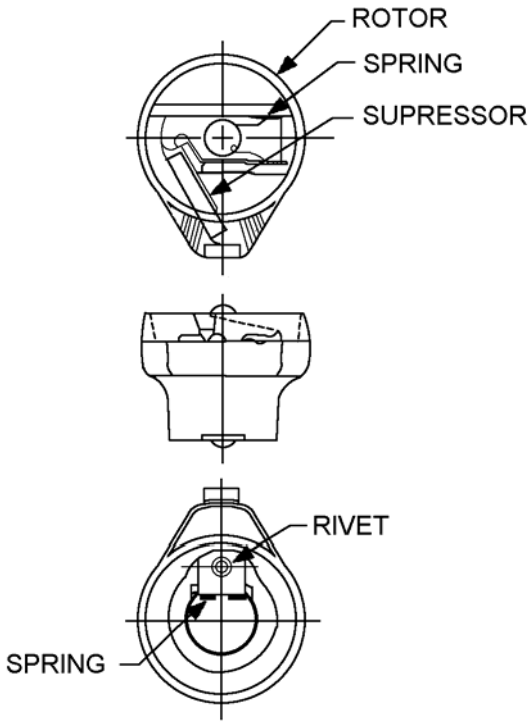

FIGURE 1. Rotor assembly.

AMSC N/A

FSC 2920

Dimensions and configurations: See figure 1.

Changes from previous issue. Marginal notations are not used in this revision to identify changes with respect to the previous issue due to the extent of the changes.

Referenced document. This document references MIL-DTL-13791.

CONCLUDING MATERIAL

Custodians:
Army - AT
Navy - SH
DLA - CC

Preparing activity:
DLA - CC

(Project 2920-2016-005)

Review activities:
Army - CR, CR4
Navy - MC

NOTE: The activities listed above were interested in this document as of the date of this document. Since organizations and responsibilities can change, you should verify the currency of the information above using the ASSIST Online database at https://assist.dla.mil.