INCH-POUND
MIL-C -62/6D
21 November 2007
SUPERSEDING
MIL-C-62C
12 February 2003

MILITARY SPECIFICATION SHEET

CAPACITORS, FIXED, ELECTROLYTIC
(DC, ALUMINUM, DRY ELECTROLYTE, POLARIZED)
STYLES CE41 AND CE44

This specification is approved for use by all Departments and Agencies of the Department of Defense.

The requirements for acquiring the capacitors described herein shall consist of this document and the latest issue of MIL-C-62.

Inactive for design
after 27 March 1979

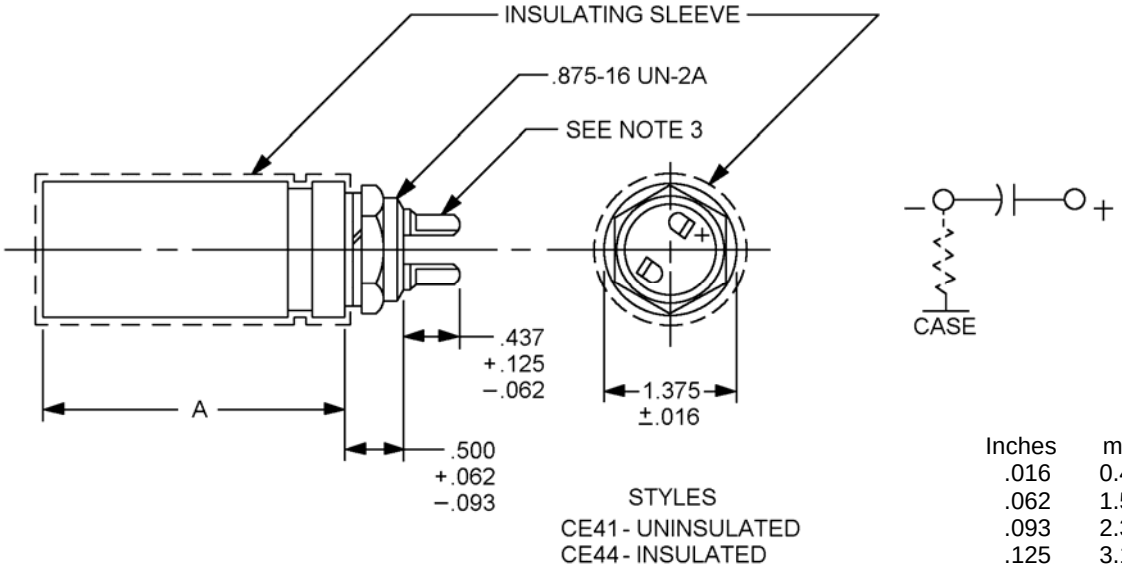

Inches	mm
.016	0.41
.062	1.57
.093	2.36
.125	3.18
.431	10.95
.500	12.70
1.375	34.93

NOTES:
1. Dimensions are in inches.
2. Metric equivalents are given for general information only.
3. Shape and position of lugs optional.
4. Capacitors are mounted by means of a mounting ring. (Family 2)
5. There is an indeterminate resistance between the metal case and the negative terminal.

FIGURE 1. Dimensions and configuration.

TABLE I. Styles CE41 and CE44 capacitors.

PIN 1/	Capacitance	DC rated voltage per section	DC leakage current per section	Maximum Impedance per section at 120 +10, -5 Hz at -40°C +0, -3°C	Dissipation factor per section	Case Dimension 2/ A 3/ ±. 062 (1.57)
	µF	volts	µA	ohms	percent	inches
CE4-C101E	100	15	58	280	20	1.750 (44.45)
CE4-C271E	270	15	95	104	20	1.750 (44.45)
CE4-C471E	470	15	126	60	20	1.750 (44.45)
CE4-C681E	680	15	153	41	20	2.250 (57.15)
CE4-C102E	1,000	15	183	28	20	2.250 (57 15)
CE4-C152E	1,500	15	222	19	20	2.250 (57.15)
CE4-C222E	2,200	15	273	13	20	2.250 (57. 15)
CE4-C332E	3,300	15	332	9.0	20	2.250 (57.15)
CE4-C472E	4,700	15	399	6.0	20	3.250 82.55
CE4-C682E	6,800	15	480	4.1	20	(4.250) 107.95
CE4-C270F	27	25	39	550	20	1.750 (44.45)
CE4-C470F	47	25	51	314	20	1.750 (44.45)
CE4-C680F	68	25	62	218	20	1.750 (44.45)
CE4-C101F	100	25	75	148	20	1.750 (44.45)
CE4-C271F	270	25	123	55	20	1.750 (44.45)
CE4-C471F	470	25	162	31	20	2.250 (57. 15)
CE4-C681F	680	25	195	22	20	2.250 (57. 15)
CE4-C911F	910	25	226	16	20	2.250 (57. 15)
CE4-C102F	1,000	25	237	14.8	20	2.250 (57.15)
CE4-C122F	1,200	25	260	12.3	20	2.750 (69. 85)
CE4-C152F	1,500	25	291	9.9	20	3.000 (76. 20)
CE4-C222F	3,200	25	352	6.7	20	3.500 (88.90)
CE4-C332F	3,300	25	423	4.5	20	4.250 (107. 95)

See footnotes at end of table

TABLE I. Styles CE41 and CE44 capacitors - Continued.

PIN 1/	Capacitance	DC rated voltage per section	DC leakage current per section	Maximum Impedance per section at 120 +10, -5 Hz at -40°C +0, -3°C	Dissipation factor per section	Case Dimension 2/ A 3/ ±. 062 (1.57)
	µF	volts	µA	ohms	percent	inches
CE4-C101G	100	50	106	148	15	1.750 (44.45)
CE4-C151G	150	50	130	99	15	1.750 (44.45)
CE4-C221G	220	50	157	67	15	2.250 (57.15)
CE4-C361G	360	50	201	41	15	2.250 (57.15)
CE4-C471G	470	50	229	31	15	2.250 (57.15)
CE4-C681G	680	50	276	22	15	2.250 (57. 15)
CE4-C751G	750	50	290	20	15	2.250 (57.15)
CE4-C102G	1,000	50	336	14.8	15	3.000 (76.20)
CE4-C152G	1,500	50	411	9.9	15	3.500 (88.90)
CE4-C222G	2,200	50	500	6.7	15	4.250 (107.95)
CE4-C680H	68	100	124	129	15	1.750 (44.45)
CE4-C101H	100	100	150	88	15	2.250 (57. 15)
CE4-C151H	150	100	183	59	15	2.250 (57. 15)
CE4-C221H	220	100	222	40	15	2.250 (57. 15)
CE4-C271H	270	100	248	33	15	2.250 (57.15)
CE4-C331H	330	100	271	27	15	2.250 (57.15)
CE4-C431H	430	100	310	21	15	2.750 (69. 85)
CE4-C471H	470	100	325	19	15	3.000 (76. 20)
CE4-C681H	680	100	391	13	15	3.750 (95.25)
CE4-C470J	47	150	126	187	12	1.750 (44.45)
CE4-C331J	330	150	332	27	12	3.000 (76.20)
CE4-C471J	470	150	398	19	12	3.750 (95.25)

See footnotes at end of table.

TABLE I. Styles CE41 and CE44 capacitors - Continued.

PIN 1/	Capacitance	DC rated voltage per section	DC leakage current per section	Maximum Impedance per section at 120 +10, -5 Hz at -40°C +0, -3°C	Dissipation factor per section	Case Dimension 2/ A 3/ ±. 062 (1.57)
	µF	volts	µA	ohms	percent	inches
CE4-C680K	68	200	175	129	12	2.250 (57.15)
CE4-C820K	82	200	192	107	12	2.250 (57.15)
CE4-C101K	100	200	211	88	12	2.250 (57.15)
CE4-C151K	150	200	260	59	12	2.250 (57. 15)
CE4-C221K	220	200	312	40	12	2.750 (69.85)
CE4-C331K	330	200	386	27	12	3.250 (82.55)
CE4-C471K	470	200	460	19	12	4.250 (107.95)
CE4-C101M	100	250	237	88	12	2.250 (57. 15)
CE4-C151M	150	250	290	59	12	2.750 (69.855)
CE4-C221M	220	250	352	40	12	3.250 (82.55)
CE4-C331M	330	250	430	27	12	4.250 (107.95)
CE4-C750N	75	300	225	117	12	2.250 (57. 15)
CE4-C121N	120	300	285	74	12	2.500 (63.50)
CE4-C151N	150	300	318	59	12	3.000 (76.20)
CE4-C221N	220	300	385	40	12	3.750 (95.25)
CE4-C100P	10	350	88	880	12	1.750 (44.45)
CE4-C270P	27	350	145	326	12	2.250 (57.15
CE4-C470P	47	350	192	187	12	2.250 (57.15)
CE4-C680P	68	350	232	129	12	2.250 (57.15)
CE4-C820P	82	350	254	107	12	2.250 (57.15)
CE4-C101P	100	350	280	88	12	2.250 (57.15)
CE4-C121P	120	350	308	74	12	3.000 (76.20)
CE4-C151P	150	350	345	59	12	3.500 (88.90)

See footnotes at end of table.

TABLE I. Styles CE41 and CE44 capacitors - Continued.

PIN 1/	Capaci-tance	DC rated voltage per section	DC leakage current per section	Maximum Impedance per section at 120 +10, -5 Hz at -40°C +0, -3°C	Dissipation factor per section	Case Dimension 2/ A 3/ ±. 062 (1.57)
	µF	volts	µA	ohms	percent	inches
CE4-C100Q	10	400	94	1,480	17	1.750 (44.45)
CE4-C270Q	27	400	156	550	17	2.250 (57.15)
CE4-C330Q	33	400	172	450	17	2.250 (57.15)
CE4-C470Q	47	400	206	314	17	2.250 (57.15)
CE4-C680Q	68	400	248	218	17	2.500 (63.50)
CE4-C820Q	82	400	271	180	17	2.750 (69.85)
CE4-C101Q	100	400	300	148	17	3.250 (82.55)
CE4-C151Q	150	400	368	99	17	4.250 (107.95)
CE4-C101R	10	450	100	2,200	17	2.250 (57. 15)
CE4-C150R	15	450	123	1,465	17	2.250 (57.15)
CE4-C270R	27	450	168	815	17	2.250 (57. 15)
CE4-C330R	33	450	182	666	17	2.250 (57.15)
CE4-C470R	47	450	217	468	17	2.750 (69.85)
CE4-C680R	68	450	262	323	17	3.250 (82.55)
CE4-C820R	82	450	289	268	17	3.500 (88.90)
CE4-C101R	100	450	318	220	17	4.250 (107.95)

1/ Complete PIN shall include an additional digit to complete style.

2/ Metric equivalents are given for general information only.

3/ The dimensions shown are for style CE41; for style CE44, add .062 (1.57) ± .062 (1.57) to the nominal dimension.

REQUIREMENTS:

Dimensions and configuration: See figure 1 and table I.

Case type: Tubular (uninsulated (CE41) and insulated (CE44).

Capacitance value: See table I.

Capacitance tolerance:

At 200 volts, dc rated, and above: -10,+50 percent.

At 150 volts, dc rated, and less: -10,+75 percent.

Operating temperature range: -40°C to +85°C.

Solderability: Method 208 of MIL-STD-202.

DC leakage: See table I.

Capacitance: Method 305 of MIL-STD-202.

Dissipation factor: See table I.

Terminal strength: Method 211of MIL-STD-202, test conditions A, B, and E.

Shock (Specified pulse): Method 213 of MIL-STD-202, test condition I.

Vibration, high frequency: Method 204 of MIL-STD-202, test condition B.

Salt atmosphere (corrosion): Method 101, test condition B, MIL-STD-202.

Temperature cycling and immersion:

Thermal shock: Method 107 of MIL-STD-202, test condition A.

Immersion: Method 104 of MIL-STD-202, test condition C.

DWV (insulating sleeves): Method 301 of MIL-STD-202. 4, 000 volts dc applied.

DCL: Not more than 150 percent of initial measurement.

Capacitance change: 5 percent.

DF: See table I.

Corrosion: Not more than 10 percent.

Moisture resistance: Method 106 of MIL-STD-202.

Insulation resistance (insulating sleeve): Not less than 100 megohms.

DWV (insulating sleeves): Method 301 of MIL-STD-202. 4,000 volts dc applied.

DCL: Not more than 150 percent of initial requirement.

Capacitance change: 5 percent.

DF: See table I.

Corrosion: Not more than 10 percent.

Stability at low and high temperature: In accordance with MIL-C-62.

Step 1 (at +25° C):

DCL: See table I.

Capacitance: See table I.

DF: See table I.

Step 2 (at -40° C):

Impedance - See table I.

Step 3 (at +25° C):

DCL: See table I.

Capacitance: ±5 percent of initial value.

DF: See table I.

Step 4 (at +85° C):

DCL: Not more than 10 times initial value, or meet initial 25°C requirements.

Capacitance: ± 20 percent of initial value.

DF: See table I.

Step 5 (at +25° C):

DCL: See table I.

Capacitance: ±5 percent of initial value.

DF: See table I.

Surge voltage: In accordance with MIL-C -62.

DCL: See table I.

Capacitance change: 6 percent.

DF: See table I.

Vent: Not applicable.

Life: Method 108 of MIL-STD-202, test condition F.

DCL: See table I.

Capacitance change:

100 volts, dc rated, and less: -20, + 15 percent.

DC rated voltage above 100 volts: ±15 percent.

DF: Meet the initial requirement or not exceed 150 percent of the initial measurement.

Barometric pressure: Method 105 of MIL-STD-202.

Shell life: In accordance with MIL-C-62.

Build factor: Not more than 4.0.

Shelf factor: Not more than 3. 0.

DCL: Not more than 150 percent of initial value.

Capacitance change: 6 percent.

DF: Not more than 175 percent of initial requirement.

Application data:

All capacitors shall withstand an rms ripple current at 120 Hz and 85° C as determined from the formula:

$$I_r = k\sqrt{C}$$

Where:

I_r = rms ripple current in milliamps.

C = nominal capacitance in microfarads.

K = 50 for units rated at 15 to 350 volts dc, inclusive.

= 40 for units rated at 400 to 450 volts dc.

Supersession data: See table II.

QUALIFICATION ASSURANCE PROVISIONS:

Qualification inspection: Not applicable.

Retention of qualification: Not applicable.

Conformance inspection: Group A inspection only.

TABLE II. Supersession data.

Superseded insulated PIN	Superseded uninsulated PIN	Recommended replacement style CE41 or CE44	Superseded insulated PIN	Superseded uninsulated PIN	Recommended replacement style CE41 or CE44
091	230	CE4-C100P	103	242	CE4-C680Q
092	231	CE4-C270P	104	243	CE4-C820Q
093	232	CE4-C470P	105	244	CE4-C101Q
094	233	CE4-C680P	106	245	CE4-C151Q
095	234	CE4-C820P	107	246	CE4-C100R
096	235	CE4-C101P	108	247	CE4-C150R
097	236	CE4-C121P	109	248	CE4-C270R
098	237	CE4-C151P	110	249	CE4-C330R
099	238	CE4-C100Q	111	250	CE4-C470R
100	239	CE4-C270Q	112	251	CE4-C680R
101	240	CE4-C330Q	113	252	CE4-C820R
102	241	CE4-C470Q	114	253	CE4-C101R

NOTES:

Reference documents. In addition to MIL-C-62, this specification sheet references the following documents.

MIL-STD-202

(Copies of these documents are available online at http://assist.daps.dla.mil/quicksearch or http://assist.daps.dla.mil or from the Standardization Document Order Desk, 700 Robbins Avenue, Building 4D, Philadelphia, PA 19111-5094).

CHANGES FROM PREVIOUS ISSUE The margins of this specification are marked with asterisks to indicate where changes from the previous issue were made. This was done as a convenience only and the Government assumes no liability whatsoever for any inaccuracies in these notations. Bidders and contractors are cautioned to evaluate the requirements of this document based on the entire content irrespective of the marginal notations and relationship to the last previous issue.

Custodians:
Army - CR
Navy - EC
Air Force - 11
DLA - CC

Review activities:
Army - AT, AV, CR4, MI
Navy - AS, MC, OS
Air Force - 19, 99

Preparing activity:
DLA-CC

(Project 5910-2007-037)

NOTE: The activities listed above were interested in this document as of the date of this document. Since organizations and responsibilities can change, you should verify the currency of the information above using ASSIST Online database at http://assist.daps.dla.mil .