INCH-POUND
MIL-C-62/5D
21 November 2007
SUPERSEDING
MIL-C-62/5C
12 February 2003

MILITARY SPECIFICATION SHEET

CAPACITORS, FIXED, ELECTROLYTIC
(DC, ALUMINUM, DRY ELECTROLYTE, POLARIZED)
STYLES CE33 AND CE36

This specification is approved for use by all Departments and Agencies of the Department of Defense.

The requirements for acquiring the product described herein shall consist of this specification sheet and MIL-C-62.

Inactive for design after 27 March 1979

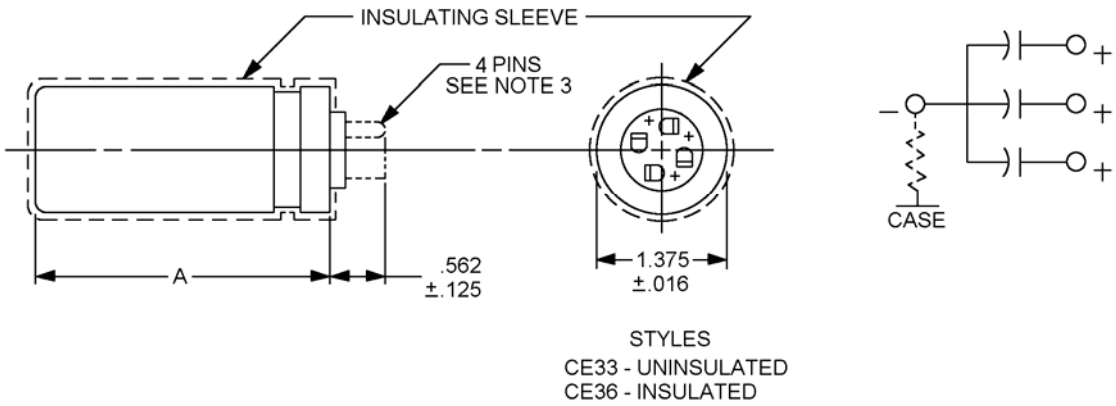

Inches	mm
.016	0.41
.125	3.18
.562	14.27
1.375	34.93

NOTES:
1. Dimensions are in inches.
2. Metric equivalents are given for general information only.
3. Shape and position of lugs optional.
4. Capacitors are mounted by means of a mounting ring. (Family 2)
5. There is an indeterminate resistance between the metal case and the negative terminal.

FIGURE 1. Dimensions and configuration.

TABLE I. Styles CE33 and CE36 capacitors.

PIN 4/	Capacitance 5/	DC rated voltage per section	DC leakage current per section	Maximum impedance per section	Dissipation factor per section	Case dimension 1/ 3/ A ±.062 (1.57)
	µF	volts	µA	ohms	percent	inches
CE3-C200J	20-20-20	150	82	440	12	2.250 (57.15)
CE3-C470J	47-47-47	150	126	187	12	2.250 (57.15)
CE3-C680J	68-68-68	150	151	129	12	2.750 (69.85)
CE3-C101J	100-100-100	150	183	88	12	3.500 (88.90)
CE3-C151J	150-150-150	150	225	59	12	4.250 2/ (107.95)
CE3-C300K	30-30-30	200	116	293	12	2.250 (57.15)
CE3-C430K	43-43-43	200	139	205	12	2.250 (57.15)
CE3-C470K	47-47-47	200	145	187	12	2.500 (63.50)
CE3-C620K	62-62-62	200	166	142	12	2.750 (69.85)
CE3-C680K	68-68-68	200	175	129	12	3.000 (76.20)
CE3-C270M	27-27-27	250	123	326	12	2.250 (57.15)
CE3-C360M	36-36-36	250	142	244	12	2.250 (57.15)
CE3-C470M	47-47-47	250	166	187	12	2.750 (69.85)
CE3-C680M	68-68-68	250	195	129	12	3.250 (82.55)
CE3-C101M	100-100-100	250	237	88	12	4.250 2/ (107.95)
CE3-C200N	20-20-20	300	116	440	12	2.250 (57.15)
CE3-C360N	36-36-36	300	156	244	12	2.750 (69.85)
CE3-C430N	43-43-43	300	170	205	12	3.000 (76. 20)
CE3-C680N	68-68-68	300	214	129	12	4.250 2/ (107.95)

See footnotes at end of table.

TABLE I. Styles CE33 and CE36 capacitors - Continued.

PIN 4/	Capacitance 5/	DC rated voltage per section	DC leakage current per section	Maximum impedance per section	Dissipation factor per section	Case dimension 1/ 3/ A ±.062 (1.57)
	µF	volts	µA	ohms	percent	inches
CE3-C100P	10-10-10	350	82	880	12	2.250 (57.15)
CE3-C120P	12-12-12	350	97	735	12	2.250 (57.15)
CE3-C150P	15-15-15	350	108	585	12	2.250 (57.15)
CE3-C300P	30-30-30	350	154	293	12	2.750 (69.85)
CE3-C360P	36-36-36	350	168	244	12	3.250 (82.55)
CE3-C470P	47-47-47	350	192	187	12	3.750 (95.25)
CE3-C100Q	10-10-10	400	94	1,480	17	2.250 (57.15)
CE3-C15OQ	15-15-15	400	129	986	17	2.250 (57.15)
CE3-C220Q	22-22-22	400	141	670	17	2.750 (69.85)
CE3-C300Q	30-30-30	400	163	493	17	3.250 (82.55)
CE3-C330Q	33-33-33	400	172	450	17	3.750 (95.25)
CE3-C100R	10-10-10	450	100	2,200	17	2.250 (57.15)
CE3-C12OR	12-12-12	450	110	1,835	17	2.500 (63.50)
CE3-C15OR	15-15-15	450	123	1,465	17	3.000 (76.20)
CE3-C200R	20-20-20	450	142	1,100	17	3.250 (82.55)
CE3-C270R	27-27-27	450	168	815	17	3.750 (95.25)
CE3-C330R	33-33-33	450	182	666	17	4. 250 2/ (107.95)

1/ Metric equivalents are given for general information only

2/ Tolerance on this dimension shall be +.062 (1.57), -.187 (4.75) inch.

3/ Dimensions shown are for style CE33; for style CE36, add .062 (1.57) ±.062 (1.57) to the nominal dimension.

4/ Complete PIN shall include an additional digit to complete style.

5/ There are three identical separate capacitors contained in each capacitor case.

REQUIREMENTS:

Dimensions and configuration: See figure 1 and table I.

Case type: Tubular.

Capacitance value: See table I.

Capacitance tolerance:

At 200 volts, dc rated, and above: -10, +50 percent.

At 150 volts, dc rated, and less: -10, +75 percent.

Operating temperature range: -40°C to +85°C.

Solderability: Method 208 of MIL-STD-202.

DC leakage: See table I.

Capacitance: Method 305 of MIL-STD-202.

Dissipation factor: See table I.

Terminal strength: Method 211 of MIL-STD-202, test conditions A, B, and E.

Shock (specified pulse): Method 213 of MIL-STD-202, test condition I.

Vibration, high frequency: Method 204 of MIL-STD-202, test condition B.

Salt atmosphere (corrosion): Method 101 of MIL-STD-202, test condition B.

Temperature cycling and Immersion:

Thermal shock: Method 107 of MIL-STD-202, test condition A.

Immersion: Method 104 of MIL-STD-202, test condition C.

DWV: Insulating sleeves - Method 301 of MIL-STD-202. 4,000 volts dc applied.

DCL: Not more than 150 percent of initial measurement.

Capacitance change: 5 percent.

DF: See table I.

Corrosion: Not more than 10 percent.

Moisture resistance: Method 106 of MIL-STD-202.

Insulation resistance (Insulating sleeve): Not less than 100 megohms.

DWV: Insulating sleeves - Method 301 of MIL-STD-202. 4, 000 volts dc applied.

DCL: Not more than 150 percent of initial requirement.

Capacitance change: 5 percent.

DF: See table I.

Corrosion: Not more than 10 percent.

Stability at low and high temperature: In accordance with MIL-C-62.

Step 1 (at +25°C):

DCL: See table I.

Capacitance: See table I.

DF: See table I.

Step 2 (at -40°C):

Impedance: See table I.

Step 3 (at +25°C):

DCL: See table I.

Capacitance: ±5 percent of initial value.

DF: See table I.

Step 4 (at +85°C):

DCL: Not more than 10 times initial value, or meet initial 25°C requirements.

Capacitance: ±20 percent of initial value.

DF - See table I.

Step 5 (at +25°C):

DCL: See table I.

Capacitance: ±5 percent of Initial value.

DF - See table I.

Surge voltage: In accordance with MIL-C-62.

DCL: See table I.

Capacitance change: 6 percent.

DF: See table I.

Vent: Not applicable.

Life: Method 108 of MIL-STD-202, test condition F.

DCL: See table I.

Capacitance change:

100 volts, dc rated and less: -20, +15 percent.

DC rated voltage above 100 volts: ±15 percent.

DF: Meet the initial requirement or not exceed 150 percent of the initial measurement.

Barometric pressure: Method 105 of MIL-STD-202.

Shelf life: In accordance with MIL-C-62.

Build factor: Not more than 4. 0.

Shelf factor: Not more than 3.0.

DCL: Not more than 150 percent of initial value.

Capacitance change: 6 percent.

DF: Not more than 175 percent of initial requirement.

Application data:

All capacitors shall withstand an rms ripple current at 120 Hz and 85°C as determined from the formula:

$$I_r = k\sqrt{C}$$

Where:

I_r = rms ripple current In milliamps.
C = nominal capacitance In microfarads per section.
k = 40 for units rated at 150 to 250 volts dc, inclusive.
= 30 for units rated at 300 to 450 volts dc, inclusive.

Supersession data: See table II.

QUALIFICATION ASSURANCE PROVISIONS:

Qualification inspection: Not applicable.

Retention of qualification: Not applicable.

Conformance inspection: Group A inspection only.

TABLE II. Suppression data.

Superseded PIN	Replacement style CE33 or CE36	Superseded PIN	Replacement style CE33 or CE36
001	CE3-C100P	025	CE3-C15OP
002	CE3-C200J	026	CE3-C200N
003	CE3-C300K	027	CE3-C300P
004	CE3-C470J	028	CE3-C360N
005	CE3-C680J	029	CE3-C430N
006	CE3-C101J	030	CE3-C680N
007	CE3-C151J	031	CE3-C100P
008	CE3-C100P	032	CE3-C120P
009	CE3-C270M	033	CE3-C150P
010	CE3-C300K	034	CE3-C300P
011	CE3-C430K	035	CE3-C300P
012	CE3-C470K	036	CE3-C360P
013	CE3-C620K	037	CE3-C470P
014	CE3-C680K	038	CE3-C100Q
015	CE3-C10IM	039	CE3-C150Q
016	CE3-C100P	040	CE3-C220Q
017	CE3-C200N	041	CE3-C300Q
018	CE3-C270M	042	CE3-C330Q
019	CE3-C360M	043	CE3-C100R
020	CE3-C470M	044	CE3-C120R
021	CE3-C470M	045	CE3-C150R
022	CE3-C680M	046	CE3-C200R
023	CE3-C101M	047	CE3-C270R
024	CE3-C100P	048	CE3-C330R

NOTES:

Reference documents. In addition to MIL-C-62, this specification sheet references the following documents.

MIL-STD-202

(Copies of these documents are available online at http://assist.daps.dla.mil/quicksearch or http://assist.daps.dla.mil or from the Standardization Document Order Desk, 700 Robbins Avenue, Building 4D, Philadelphia, PA 19111-5094).

CHANGES FROM PREVIOUS ISSUE The margins of this specification are marked with asterisks to indicate where changes from the previous issue were made. This was done as a convenience only and the Government assumes no liability whatsoever for any inaccuracies in these notations. Bidders and contractors are cautioned to evaluate the requirements of this document based on the entire content irrespective of the marginal notations and relationship to the last previous issue.

Custodians:
Army - CR
Navy - EC
Air Force - 11
DLA - CC

Preparing activity:
DLA - CC

(Project 5910-2007-036)

Review activities:
Army - AT, AV, CR4, MI
Navy - AS, MC, OS
Air Force - 19, 99

NOTE: The activities listed above were interested in this document as of the date of this document. Since organizations and responsibilities can change, you should verify the currency of the information above using ASSIST Online database at http://assist.daps.dla.mil .