INCH-POUND
MIL-C-62/3D
21 November 2007
SUPERSEDING
MIL-C-62/3C
12 February 2003

MILITARY SPECIFICATION SHEET

CAPACITORS, FIXED, ELECTROLYTIC
(DC, ALUMINUM, DRY ELECTROLYTE, POLARIZED)
STYLES CE31 AND CE34

This specification is approved for use by all Departments and Agencies of the Department of Defense.

The requirements for acquiring the product described herein shall consist of this specification sheet and MIL-C-62.

Inactive for design
after 27 March 1979

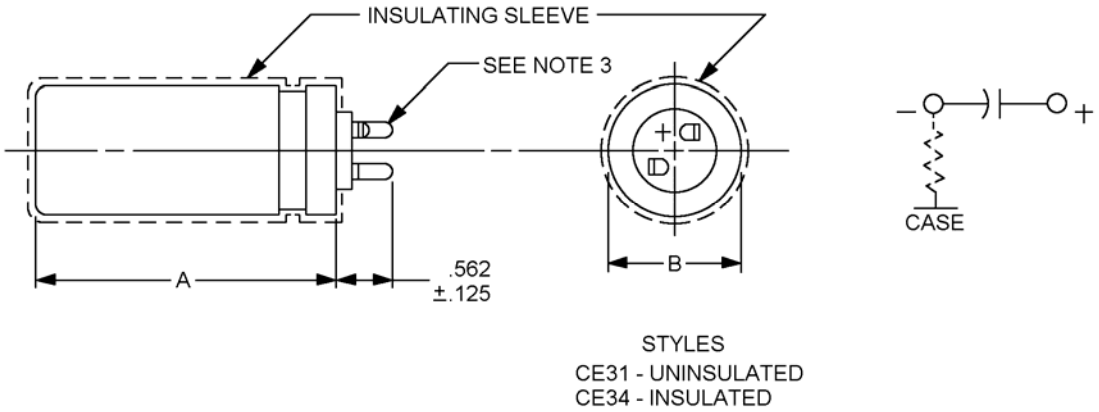

Inches	mm
.125	3.18
.562	14.27

NOTES:
1. Dimensions are in inches.
2. Metric equivalents are given for general information only.
3. Shape and position of lugs optional.
4. Capacitors are mounted by means of a mounting ring. (Family 2).
5. There is an indeterminate resistance between the metal case and the negative terminal.

FIGURE 1. Dimensions and configuration.

TABLE I. Styles CE31 and CE34 capacitors.

PIN 5/	Capaci-tance	DC Rated voltage	DC leakage current	Maximum impedance	Dissipation factor	Case dimensions 1/ 4/	
						A	B
						±. 062) (1.57)	±. 016 (.41)
	uF	volts	uA	ohms	percent	inches	inches
CE3-C101E	100	15	58	280	20	1.750 2/ (44.45)	1.000 (25.40)
CE3-C151E	150	15	71	187	20	1.750 2/ (44.45)	1.000 (25.40)
CE3-C271E	270	15	95	104	20	1.750 2/ (44.45)	1.000 (25.40)
CE3-C331E	330	15	105	85	20	1.750 2/ (44.45)	1.000 (25.40)
CE3-C471E	470	15	126	60	20	1.750 2/ (44.45)	1 000 (25.40)
CE3-C681E	680	15	153	41	20	2.250 (57.15)	1.375 (34.93)
CE3-CI02E	1,000	15	183	28	20	2.250 (57.15)	1.375 (34.93)
CE3-C152E	1,500	15	225	19	20	2.250 (57.15)	1.375 (34.93)
CE3-C222E	2,200	15	273	13	20	2.250 (57.15)	1.375 (34.93)
CE3-C332E	3,300	15	332	8.5	20	2.500 (63.50)	1.375 (34.93)
CE3-C472E	4,700	15	399	5.9	20	3.250 (82.55)	1.375 (34.93)
CE3-C682E	6,800	15	480	4.1	20	4.250 3/ (107.95)	1.375 (34.93)
CE3-C270F	27	25	39	550	20	1.750 2/ (44.45)	1.000 (25.40)
CE3-C470F	47	25	51	314	20	1.750 2/ (44.45)	1.000 (25.40)
CE3-C680F	68	25	62	218	20	1.750 2/ (44.45)	1.000 (25.40)
CE3-C101F	100	25	75	148	20	1.750 2/ (44.45)	1.000 (25.40)
CE3-C151F	150	25	92	99	20	1.750 2/ (44.45)	1.000 (25.40)
CE3-C221F	220	25	110	67	20	1.750 2/ (44.45)	1.000 (25.40)
CE3-C271F	270	25	123	55	20	1.750 2/ (44.45)	1.000 (25.40)
CE3-C331F	330	25	136	45	20	1.750 2/ (44.45)	1.000 (25.40)
CE3-C471F	470	25	162	31	20	2.250 (57.15)	1.375 (34.93)
CE3-C681F	680	25	195	22	20	2.250 (57.15)	1.375 (34.93)
CE3-C911F	910	25	226	16	20	2.250 (57.15)	1.375 (34.93)
CE3-C102F	1,000	25	237	15	20	2.250 (57.15)	1.375 (34.93)

See footnotes at end of table

TABLE I. Styles CE31 and CE34 capacitors.

PIN 5/	Capaci-tance	DC Rated voltage	DC leakage current	Maximum impedance	Dissipation factor	Case dimensions 1/ 4/	
						A	B
						±. 062) (1.57)	±. 016 (.41)
	uF	volts	uA	ohms	percent	inches	inches
CE3-C122F	1,200	25	260	12	20	2.750 (69.85)	1.375 (34.93)
CE3-C152F	1,500	25	291	10	20	3.000 (76.20)	1.375 (34.93)
CE3-C222F	2,200	25	352	6.7	20	3.500 (88.90)	1.375 (34.93)
CE3-C332F	3,300	25	425	4.5	20	4.250 2/ (107.95)	1.375 (34.93)
CE3-C101G	100	50	106	148	15	1.750 (44.45)	1.000 (25.40)
CE3-C151G	150	50	130	99	15	1.750 (44.45)	1.000 (25.40)
CE3-C221G	220	50	157	67	15	2.250 (57.15)	1.375 (34.93)
CE3-C361G	360	50	201	41	15	2.250 (57.15)	1.375 (34.93)
CE3-C471G	470	50	230	31	15	2.250 (57.15)	1.375 (34.93)
CE3-C681G	680	50	276	22	15	2.250 (57.15)	1.375 (34.93)
CE3-C751G	750	50	290	20	15	2.250 (57.15)	1.375 (34.93)
CES-C102G	1,000	50	336	15	15	3.000 (76.20)	1.375 (34.93)
CE3-C152G	1,500	50	411	10	15	3.500 (88.90)	1.375 (34.93)
CE3-C680H	68	100	124	130	15	1.750 (44.45)	1.000 (25.40)
CE3-C101H	100	100	150	88	15	2.250 (57.15)	1.000 (25.40)
CE3-C151H	150	100	183	59	15	2.250 (57.15)	1.375 (34.93)
CE3-C221H	220	100	222	40	15	2.250 (57.15)	1.375 (34.93)
CE3-C331H	330	100	271	27	15	2.250 (57.15)	1.375 (34.93)
CE3-C431H	430	100	310	21	15	2.750 (69.85)	1.375 (34.93)
CE3-C471H	470	100	325	19	15	3.000 (76.20)	1.375 (34.93)
CE3-C681H	680	100	391	13	15	3.750 (95.25)	1.375 (34.93)
CE3-C470J	47	150	126	187	12	1.750 2/ (44.45)	1.000 (25.40)
CE3-C820J	82	150	166	107	12	2.250 (57.15)	1.000 (25.40)
CE3-C101J	100	150	183	88	12	2.750 (69.85)	1.000 (25.40)

See footnotes at end of table

TABLE I. Styles CE31 and CE34 capacitors.

PIN 5/	Capaci-tance	DC Rated voltage	DC leakage current	Maximum impedance	Dissipation factor	Case dimensions 1/ 4/	
						A	B
						±. 062) (1.57)	±. 016 (.41)
	uF	volts	uA	ohms	percent	inches	inches
CE3-C201J	200	150	260	44	12	2.250 (57.15)	1.375 (34.93)
CE3-C271J	270	150	302	33	12	2.750 (69.85)	1.375 (34.93)
CE3-C331J	330	150	332	27	12	3.000 (76.20)	1.375 (34.93)
CE3-C471J	470	150	398	19	12	3.750 (95.25)	1.375 (34.93)
CE3-C680K	68	200	175	129	12	2.250 (57.15)	1.000 (25.40)
CE3-C820K	82	200	192	107	12	2.250 (57.15)	1.375 (34.93)
CE3-C101K	100	200	211	88	12	2.250 (57.15)	1.375 (34.93)
CE3-C151K	150	200	259	59	12	2.250 (57.15)	1.375 (34.93)
CE3-C221K	220	200	312	40	12	2.750 (69.85)	1.375 (34.93)
CE3-C331K	330	200	386	27	12	3.250 (82.55)	1.375 (34.93)
CE3-C471K	470	200	460	19	12	4.2503/ (107.95)	1.375 (34.93)
CE3-C330M	33	250	136	266	12	1.750 (44.45)	1.000 (25.40)
CE3-C101M	100	250	237	88	12	2.250 (57.15)	1.375 (34.93)
CE3-C151M	150	250	290	59	12	2.750 (69.85)	1.375 (34.93)
CE3-C221M	220	250	352	40	12	3.250 (82.55)	1.375 (34.93)
CE3-C331M	330	250	430	27	12	4.250 3/ (107.95)	1.375 (34.93)
CE3-C150N	15	300	101	585	12	1.750 2/ (44.45)	1.000 (25.40)
CE3-C220N	22	300	122	400	12	1.750 2/ (44.45)	1.000 (25.40)
CE3-C330N	33	300	148	266	12	2.250 (57.15)	1.000 (25.40)
CE3-C470N	47	300	178	187	12	2.250 (57.15)	1.000 (25.40)
CE3-C750N	75	300	225	117	12	2.500 (57.15)	1.375 (34.93
CE3-C121N	120	300	285	73	12	2.500 (63.50)	1.375 (34.93)
CE3-C151N	150	300	318	59	12	3.000 (76.20	1.375 (34.93)
CE3-C221N	220	300	386	40	12	3.750 (95.25)	1.375 (34.93)

See footnotes at end of table

TABLE I. Styles CE31 and CE34 capacitors.

PIN 5/	Capaci-tance	DC Rated voltage	DC leakage current	Maximum impedance	Dissipation factor	Case dimensions 1/ 4/	
						A	B
						±. 062) (1.57)	±. 016 (.41)
	uF	volts	uA	ohms	percent	inches	inches
CE3-C100P	10	350	88	880	12	1.750 2/ (44.45)	1.375 (25.40)
CE3-C270P	27	350	146	326	12	2.250 (57.15)	1.000 (25.40)
CE3-C330P	33	350	161	266	12	2.750 (69.85)	1.000 (25.40)
CE3-C470P	47	350	192	187	12	2.250 (57.15)	1.375 (34.93)
CE3 -C680P	68	350	232	129	12	2.250 (57.15)	1.375 (34.93)
CE3-C820P	82	350	254	107	12	2.250 (57.15)	1.375 (34.93)
CE3-C101P	100	350	280	88	12	2.250 (57.15)	1.375 (34.93)
CE3-C121P	120	350	308	73	12	3.000 (76.20)	1.375 (34.93)
CE3-C151P	150	350	345	59	12	3.500 (88.90)	1.375 (34.93)
CE3-C221P	220	350	416	40	12	4.250 3/ (107.95)	1.375 (34.93)
CE3-C100Q	10	400	94	1,480	17	1.750 2/ (44.45)	1.000 (25.40)
CE3-C150Q	15	400	116	986	17	1.750 2/ (44.45)	1.000 (25.40)
CE3-C220Q	22	400	141	670	17	2.250 (57.15)	1.000 (25.40)
CE3-C270Q	27	400	156	550	17	2.250 (57.15)	1.000 (25.40)
CE3-C390Q	39	400	187	380	17	2.250 (57.15)	1.375 (34.93)
CE3-C560Q	56	400	222	264	17	2.250 (57.15)	1.375 (34.93)
CE3-C680Q	68	400	248	218	17	2.250 (57.15)	1.375 (34.93)
CE3-C820Q	82	400	271	180	17	2.750 (69.85)	1.375 (34.93)
CE3-C101Q	100	400	300	148	17	3.250 (82.55)	1.375 (34.93)
CE3-C151Q	150	400	368	99	17	4.250 3/ (107.95)	1.375 (34.93

See footnotes at end of table

TABLE I. Styles CE31 and CE34 capacitors.

PIN 5/	Capaci-tance	DC Rated voltage	DC leakage current	Maximum impedance	Dissi-pation factor	Case dimensions 1/ 4/	
						A	B
						±. 062) (1.57)	±. 016 (.41)
	uF	volts	uA	ohms	percent	inches	inches
CE3-C6R8R	6.8	450	83	3,230	17	1.750 2/ (44.45)	1.000 (25.40)
CE3-C150R	15	450	123	1,465	17	2.250 (57.15)	1.000 (25.40
CE3-C270R	27	450	168	815	17	2.250 (57.15)	1.000 (25.40)
CE3-C330R	33	450	182	666	17	2.250 (57.15)	1.375 (34.93)
CE3-C470R	47	450	217	468	17	2.750 (69.85)	1.375 (34.93)
CE3-C680R	68	450	262	323	17	3.250 (82.55)	1.375 (34.93)
CE3-C820R	82	450	289	268	17	3.500 (88.90)	1.375 (34.93)
CE3-C101R	100	450	318	220	17	4.250 3/ (107.95)	1.375 (34.93)

1/ Metric equivalents are given for general information only.

2/ Tolerance for this dimension shall be + .062 (1.57), -.125 (3.18).

3/ Tolerance for this dimension shall be +.062 (1.57), -.188 (4.78).

4/ Dimensions shown are for style CE31; for style CE34, add .062 (1.57) ± .062 (1.57) to the nominal dimension.

5/ Complete PIN shall include an additional digit to complete style.

REQUIREMENTS:

Dimensions and configuration: See figure 1 and table I.

Case type: Tubular.

Capacitance value: See table I.

Capacitance tolerance:

At 200 volts, dc rated, and above: -10,+50 percent.

At 150 volts, dc rated, and less: -10,+75 percent.

Operating temperature range: -40°C to +85°C.

Solderability: Method 208 of MIL-STD-202.

DC leakage: See table I.

Capacitance: Method 305 of MIL-STD-202.

Dissipation factor: See table I.

Terminal strength: Method 211 of MIL-STD-202, test conditions A, B, and E.

Shock (specified pulse): Method 213 of MIL-STD-202, test condition I.

Vibration, high frequency: Method 204 of MIL-STD-202, test condition B.

Salt atmosphere (corrosion): Method 101 of MIL-STD-202, test condition B.

Temperature cycling and immersion:

Thermal shock: Method 107 of MIL-STD-202, test condition A.

Immersion: Method 104 of MIL-STD-202, test condition C.

DWV (insulating sleeves): Method 301 of MIL-STD-202. 4,000 volts dc applied.

DCL: Not more than 150 percent of initial measurement.

Capacitance change: 5 percent.

DF: See table I.

Corrosion: Not more than 10 percent.

Moisture resistance: Method 106 of MIL-STD-202.

Insulation resistance (insulating sleeve): Not less than 100 megohms.

DWV (insulating sleeves): Method 301 of MIL-STD-202. 4,000 volts dc applied.

DCL: Not more than 150 percent of initial requirement.

Capacitance change: 5 percent.

DF: See table I.

Corrosion: Not more than 10 percent.

Stability at low and high temperature: In accordance with MIL-C-62.

Step 1 (at +25°C):

DCL: See table I.

Capacitance: See table I.

DF: See table I.

Step 2 (at -40°C):

Impedance: See table I.

Step 3 (at +25°C):

DCL: See table I.

Capacitance: ±5 percent of initial value.

DF: See table I.

Step 4 (at +85°C):

DCL: Not more than 10 times initial value, or meet initial +25°C requirement.

Capacitance: ±20 percent of initial value.

DF: See table I.

Step 5 (at +25°C):

DCL: See table I.

Capacitance: ±5 percent of initial value.

DF: See table I.

Surge voltage: In accordance with MIL-C-62.

DCL: See table I.

Capacitance change: 6 percent.

DF: See table I.

Vent: Not applicable.

Life: Method 108 of MIL-STD-202, test condition F.

DCL: See table I.

Capacitance change: 100 volts, dc rated, and less: -20, +15 percent.

DC rated voltage above 100 volts: ±15 percent.

DF: Meet the initial requirement or not exceed 150 percent of the initial measurement.

Barometric pressure: Method 105 of MIL-STD-202.

Shell life: In accordance with MIL-C-62.

Build factor: Not more than 4.0.

Shelf factor: Not more than 3. 0.

DCL: Not more than 150 percent of initial value.

Capacitance change: 6 percent.

DF: Not more than 150 percent of initial requirement.

QUALIFICATION ASSURANCE PROVISIONS:

Qualification inspection: Not applicable.

Retention of qualification: Not applicable.

Conformance inspection: Group A inspection only.

Application data:

All capacitors shall withstand an rms ripple current at 120 Hz and 85°C as determined from the formula:

$$I_r = k\sqrt{C}$$

Where:

I_r = rms ripple current in milliamps.
C = nominal capacitance in microfarads.
K = 50 for units rated at 15 to 150 volts dc, inclusive, for any case diameter.
= 35 for units rated at 200 to 300 volts dc, inclusive, for case diameter 1.0 inch.
= 30 for units rated at 350 to 450 volts dc, inclusive, for case diameter 1.0 inch.
= 50 for units rated at 200 to 350 volts dc, inclusive, for case diameter 1.375 Inches.
= 40 for units rated at 400 to 450 volts dc, inclusive, for case diameter 1.375 inches.

Supersession data: See table II.

TABLE II. Supersession data.

Superseded PIN	Replacement style CE3 or CE34	Superseded PIN	Replacement style CE31 or CE34	Superseded PIN	Replacement style CE31 or CE34
001	CE3-C101E	046	CE3-C470J	091	CE3-C151M
002	CE3-C151E	047	CE3-C680H	092	CE3-C221M
003	CE3-C271E	048	CE3-C100H	093	CE3-C331M
004	CE3-C331E	049	CE3-C100H	094	CE3-C100P
005	CE3-C471E	050	CE3-C150H	095	CE3-C151N
006	CE3-C681E	051	CE3-C221H	096	CE3-C220N
007	CE3-C681E	052	CE3-C331H	097	CE3-C330N
008	CE3-C102E	053	CE3-C331H	098	CE3-C470N
009	CE3-C152E	054	CE3-C431H	099	CE3-C750N
010	CE3-C152E	055	CE3-C471H	100	CE3-C750N
011	CE3-C222E	056	CE3-C681H	101	CE3-C101N
012	CE3-C222E	057	CE3-C100P	102	CE3-C121N
013	CE3-C332E	058	CES-C470J	103	CE3-C151N
014	CE3-C472E	059	CE3-C470J	104	CE3-C221N
015	CE3-C682E	060	CE3-C680K	105	CE3-C100P
016	CE3-C270F	061	CE3-C820J	106	CE3-C270P
017	CE3-C470F	062	CE3-C101J	107	CE3-C270P
018	CE3-C101F	063	CE3-C101J	108	CE3-C330P
019	CE3-C151F	064	CE3-C151K	109	CE3-C470P
020	CE3-C151F	065	CE3-C201J	110	CE3-C680P
021	CE3-C271F	066	CE3-C271J	111	CE3-C820P
022	CE3-C331F	067	CE3-C271J	112	CE3-C101P
023	CE3-C471F	068	CE3-C331J	113	CE3-C121P
024	CE3-C471F	069	CE3-C471J	114	CE3-C151P
025	CE3-C681F	070	CE3-C100P	115	CE3-C221P
026	CE3-C911F	071	CE3-C150N	116	CE3-C100P
027	CE3-C102F	072	CE3-C220N	117	CE3-C150Q
028	CE3-C122F	073	CE3-C330M	118	CE3-C200Q
029	CE3-C152F	074	CE3-C470N	119	CE3-C270Q
030	CE3-C222F	075	CE3-C680K	120	CE3-C390Q
031	CE3-C332F	076	CE3-C820K	121	CE3-C560Q
032	CE3-C470J	077	CE3-CI01K	122	CE3-C680Q
033	CE3-C470J	078	CE3-CI51K	123	CE3-C820Q
034	CE3-C680H	079	CE3-C221K	124	CE3-C101Q
035	CE3-C101G	080	CE3-C221K	125	CE3-C101Q
036	CE3-C151G	081	CE3-C331K	126	CE3-C151Q
037	CE3-C221G	082	CE3-C471K	127	CE3-C6R8R
038	CE3-C361G	083	CE3-C100P	128	CE3-C150R
039	CE3-C471G	084	CE3-C150N	129	CE3-C270R
040	CE3-C681G	085	CE3-C330M	130	CE3-C270R
041	CE3-C751G	086	CE3-C470N	131	CE3-C330R
042	CE3-CI02G	087	CE3-C470N	132	CE3-C470R
043	CE3-C152G	088	CE3-C680P	133	CE3-C680R
044	CE3-C470J	089	CE3-C820P	134	CE3-C820R
045	CE3-C470J	090	CE3-C101M	135	CE3-C101R

NOTES:

Reference documents. In addition to MIL-C-62, this specification sheet references the following documents.

MIL-STD-202

(Copies of these documents are available online at http://assist.daps.dla.mil/quicksearch or http://assist.daps.dla.mil or from the Standardization Document Order Desk, 700 Robbins Avenue, Building 4D, Philadelphia, PA 19111-5094).

CHANGES FROM PREVIOUS ISSUE The margins of this specification are marked with asterisks to indicate where changes from the previous issue were made. This was done as a convenience only and the Government assumes no liability whatsoever for any inaccuracies in these notations. Bidders and contractors are cautioned to evaluate the requirements of this document based on the entire content irrespective of the marginal notations and relationship to the last previous issue.

Custodians:
Army - CR
Navy - EC
Air Force - 11
DLA - CC

Preparing activity:
DLA-CC

(Project 5910-2007-035)

Review activities:
Army - AT, AV, CR4, MI
Navy - AS, MC, OS
Air Force - 19, 99

NOTE: The activities listed above were interested in this document as of the date of this document. Since organizations and responsibilities can change, you should verify the currency of the information above using ASSIST Online database at http://assist.daps.dla.mil .