INCH-POUND

FED-STD-228A
18 April 2014
SUPERSEDING
FED. TEST METHOD STD. No. 228
April 14, 1967

FEDERAL STANDARD

TEST METHODS FOR CABLES AND WIRE, INSULATED

The General Services Administration has authorized the use of this federal standard, by all federal agencies.

AMSC N/A

FSC 6145

FED-STD-228A

FEDERAL STANDARD

TEST METHODS FOR CABLES AND WIRE, INSULATED

AUTHORITY: This standard is issued pursuant to the Federal Property and Administration Service Act of 1949, as amended, and its application to the purchase of commodities referred to herein in mandatory on all Federal agencies.

SECTION 1

SCOPE AND CONTENTS

1. SCOPE

1.1 This standard gives the general physical, electrical, and chemical methods for testing insulated wire and cable for electrical purposes for conformance with the requirements of Federal and Military specifications, and other related documents. It was prepared in order to eliminate unnecessary or undesirable variation in testing procedures. This standard does not include special test methods applicable to certain wires and cables which are described in the appropriate detail specifications, nor does it include all the test methods for wires and cables used in the industry. In case of conflict between the provisions of those methods and those of the individual test procedures or specifications for particular material, the latter should take precedence.

2. CONTENTS

2.1 Contents. The contents of this standard are as follows:

1. Scope and Contents.
2. Numbering System.
3. Alphabetical Index of Test Method Subjects.
4. Numerical Index of Test Methods.
5. Subject Index.
6. Definition of Terms.
7. Temperature and Humidity of Conditioning Room.
8. Notes.

1000 – Geometrical Measurements.
2000 – Mechanical Tests.
3000 – Tension Tests.
4000 – Accelerated Aging Tests.
5000 – Thermal Tests.
6000 – Electrical Tests.
7000 – Chemical Tests.
8000 – Miscellaneous Tests.

SECTION 2

FORM AND NUMBERING SYSTEM

1. SCOPE

1.1 Scope. This section contains a brief description of the from and the system of numbering within individual methods, and also the manner in which new methods are added and old methods revised.

2. FORM

2.1 Revision of existing methods. When a technical change or modification is issued, it will be identified by adding a decimal point to the basic method number or by increasing the decimal by one digit; e.g., 3111, if modified or changed, would be 3111.1; and 2011.1, if modified or changed, would be 2011.2.

2.1.1 Revision precedence. When a revision is issued on a Standard 228 method, it automatically supersedes the previous method. Use the method of the particular revision in force at the time of invitation to bid for testing.

2.1.2 Numbering system used. When a technical change or modification is issued, it will be identified by adding a decimal point to the basic number or by incrementing the decimal.

2.2 New methods. A method number will be assigned so that the new method is located close to methods of similar or related tests.

2.3 Use of ASTM test methods. American Society for Testing and Materials (ASTM) methods listed in section 7 of this standard have been accepted as substitutes for the applicable cancelled Federal test methods and should be used whenever the Fed. Test Method Std. 228 method number is referenced. When superseded 228 methods are to be cited in the future, the accepted ASTM method should be cited directly.

3. INDEXES AND METHOD FORMAT

3.1 The indexes.

3.1.1 Alphabetical index (section 3). In the alphabetical index, each current method is listed alphabetically by its primary purpose as indicated in the title.

3.1.2 Numerical index (section 4). The numerical index lists all current methods in numerical order.

3.1.3 Subject index (section 5). The subject index lists all current methods by subject.

3.1.4 Numerical index of cancelled references (section 6). An index of cancelled, deleted, or superseded test methods is listed with cross-reference to the superseding Fed. Test Method Std. 228 or accepted ASTM test methods where applicable.

3.1.5 Numerical index of accepted ASTM test methods (section 7). The ASTM test methods accepted are listed with cross-reference to cancelled Fed. Test Method Std. 228 test methods.

3.2 Test method format. Whenever possible, the test methods contain the first five of the following six paragraphs. Data on precision are included whenever available.

3.2.1 Scope. The scope of each test method is given in paragraph 1. It describes the purpose of the test method.

3.2.2 Specimen. The specimen for each test method is listed in paragraph 2.

3.2.3 Apparatus and reagents. The apparatus for each test method is listed in paragraph 3. Unusual apparatus is listed, along with the standardization techniques and construction requirements, if applicable. All reagents required in a test method are listed in paragraph 3. Details are given for the preparation of reagents that must be manufactured specifically for a particular test method.

3.2.4 Procedure. The procedure to be followed in each test method is detailed in paragraph 4. The procedure generally includes three major sections, preparation of the test specimen, performance of the test involved, and the calculation of results.

3.2.5 Results. Calculations and results are listed in paragraph 5.

SECTION 3

ALPHABETICAL INDEX OF TEST METHOD SUBJECTS

Title	Method No.	Title	Method No.
Abrasion Resistance	2211.2	Resistance to Oil, Insulation and Sheath	4221.1
Air Oven Test, Insulation and Sheath	4031.1	Resistance to Oil, Insulation and Sheath (Recovery Method)	4223.1
Air Pressure Test, Insulation and Sheath	4021.1	Resistance to Ozone, Insulation and Sheath	4111.1
Angle, Braid	1611.1	Resistance to Petrolatum, Varnished Cloth	4211.1
Angle, Wrap	1621.1	Size, Conductor	1431.1
Angle of Braid, Metal Armor	1631.1	Specific Gravity; Hydrostatic	8322.1
Buffing, Insulation and Sheath	3011.1	Specific Gravity; Pycnometer	8321.1
Calibration, Tension Testing Machine	3016.1	Springiness, Armor Wire	2161.1
Capacitance Change with Time in Water	6271.1	Surface Resistance, Finished Wire and Cable	6041.1
Carriers, Ends per Carrier, and Ply of Yarns; Braid	8021.1	Tearing Strength, Sheath	3111.1
Chemical Tests; General	7001.1	Tensile Strength, Insulation and Sheath	3021.1
Circumference	1441.1	Tensile Strength, Varnished Cloth Insulation	3171.1
Conductor Coating, Ammonium Persulfate	7123.1	Tensile Strength and Elongation, Medium Hard-Drawn or Hard-Drawn Conductors	3212.1
Conductor Coating, Sodium Polysulfide	7121.1	Tensile Strength and Elongation, Soft or Annealed Conductors	3211.1
Coverage, Braid, Metal Armor	8121.1	Tensile Stress, Insulation and Sheath	3041.1
Coverage, Wrap or Serving	8131.1	Tension Set, Insulation and Sheath	3161.1
Diameter, Armor Wire	1421.1	Tension Tests, Insulation and Sheath; General	3001.1
Dielectric Strength, Cloth and Tape	6221.1	Test Tube Heat-Aging, Insulation and Sheath	4041.1
Direction of Lay	8111.1	Thickness, Bedding; Diameter Tape	1173.1
Drip, Cable	5141.1	Thickness, Bedding; Micrometer Caliper	1171.1
Drip, Fibrous Covering	5131.1	Thickness, Braid	1111.1
Elongation, Armor	2111.1	Thickness, Cotton Tape; Dial Micrometer	1124.1
Elongation, Insulation and Sheath	3031.1	Thickness, Cotton Tape; Micrometer Caliper	1121.1
Flammability, Horizontal	5211.1	Thickness, Insulation; Dial Micrometer	1013.1
Flammability, Spark Method	5231.1	Thickness, Insulation; Micrometer Caliper	1011.1
Flammability, Vertical	5221.1	Thickness, Insulation, Minimum; Pin-Gage Dial Micrometer	1014.1
Flexibility, Armored Cable, Low Temperature	2021.1	Thickness, Insulation; Optical	1018.1
Flexibility, Cotton Covered Electric Cord	2031.1	Thickness, Lead Sheath; Micrometer Caliper (Flat Anvil)	1313.1
Flexibility, Extensile and Retractile Cord	2051.1	Thickness, Lead Sheath; Micrometer Caliper (Round Anvil)	1311.1
Flexibility, Fibrous Coverings	2041.1	Thickness, Metal Tape Armor	1211.1
Flexibility, Fibrous Coverings, Low Temperature	2043.1	Thickness, Serving; Diameter Tape	1153.1
Flexibility, Insulation, Low Temperature	2011.1	Thickness, Serving; Micrometer Caliper	1151.1
Fluid Immersion	7021.3	Thickness, Sheath	1331.1
Heat Distortion, Insulation	5021.1	Thickness, Varnished Cloth	1051.1
Heat Shock, Insulation	5011.1	Thickness, Woven or Braided Metal Armor; Diameter Type	1223.1
Identification, Synthetic Elastomers, Insulation and Sheath	7251.1	Thickness, Woven or Braided Metal Armor; Micrometer Caliper	1221.1
Insulation Defects, Spark Test	6211.2	Thickness, Wrap	1141.1
Insulation Shrinkage (Molten Solder Method)	8231.1	Tightness, Armor	2171.1
Lay of Twist, Armor Wire	1511.1		
Lay of Twist, Cable	1521.1		
Lead Sheath, Composition	7231.1		
Length of Lay, Wrap or Serving	1531.1		
Melt, Fibrous Covering	5111.1		
Mineral Content, Coverings	7211.1		
Moisture Absorption, Fibrous Covering	8221.1		

ALPHABETICAL INDEX OF TEST METHOD SUBJECTS Continued.

Title	Method No.	Title	Method No.
Moisture Absorption, Insulation	8211.1	Toughness, Armor Wire	2131.1
Opening, Armor	2181.1	Voltage Withstand, Insulated Wire and Cable	6111.1
Overlap, Cotton Tape	1711.1	Voltage Withstand, Insulation, Flexing	6121.1
Oxygen Pressure Test, Insulation and Sheath	4011.1	Voltage Withstand, Insulation, Flexing Low Temperature	6131.1
Picks Per Inch, Braid	8011.1	Weight, Wire or Cable, Conductor and Covering Material	8311.1
Resistance, Electrical, Conductor	6021.2	Width, Metal Tape Armor	1411.1
Resistance, Electrical, Insulation	6031.1	Yarns per Inch, Fibrous Covering	8031.1
Resistance, Electrical, Steel Armor	6011.1	Yarns per Inch, Varnished Cloth	8033.1
Resistance to Acid and Alkali	7011.1	Yarn Size, Wrap and Serving	8041.1
Resistance to Heat, Oxygen, Air, Light, and Ozone; General	4001.1	Zinc Coating, Steel Armor	7111.1
Resistance to Light, Insulation and Sheath	4131.1		

SECTION 4

NUMERIAL INDEX OF TEST METHODS

Method number	Title
1011.1	Thickness, insulation; micrometer caliper
1013.1	Thickness, Insulation; dial micrometer
1014.1	Thickness, insulation, minimum; pin-gage dial micrometer
1018.1	Thickness, insulation; optical
1051.1	Thickness, varnished cloth
1111.1	Thickness, braid
1121.1	Thickness, cotton tape; micrometer caliper
1124.1	Thickness, cotton tape; dial micrometer
1141.1	Thickness, wrap
1151.1	Thickness, serving; micrometer caliper
1153.1	Thickness, serving; diameter tape
1171.1	Thickness, bedding; micrometer caliper
1173.1	Thickness, bedding; diameter tape
1211.1	Thickness, metal tape armor
1221.1	Thickness, woven or braided metal armor; micrometer caliper
1223.1	Thickness, woven or braided metal armor; diameter tape
1311.1	Thickness, lead sheath; micrometer caliper (round anvil)
1313.1	Thickness, lead sheath; micrometer caliper (flat anvil)
1331.1	Thickness, sheath
1411.1	Width, metal tape armor
1421.1	Diameter, armor wire
1431.1	Size, conductor
1441.1	Circumference
1511.1	Lay of twist, armor wire
1521.1	Lay of twist, cable
1531.1	Length of lay, wrap or serving

NUMERICAL INDEX OF TEST METHODS – Continued

Method number	Title
1611.1	Angle, braid
1621.1	Angle, wrap
1631.1	Angle of braid, metal armor
1711.1	Overlap, cotton tape
2011.1	Flexibility, insulation, low temperature
2021.1	Flexibility, armored cable, low temperature
2031.1	Flexibility, cotton covered electric cord
2041.1	Flexibility, fibrous coverings
2043.1	Flexibility, fibrous coverings, low temperature
2051.1	Flexibility, extensile and retractile cord
2061.1	Crush Resistance
2111.1	Elongation, armor
2131.1	Toughness, armor wire
2161.1	Springiness, armor wire
2171.1	Tightness, armor
2181.1	Opening, armor
2211.2	Abrasion resistance
3001.1	Tension tests, insulation and sheath; general
3011.1	Buffing, insulation and sheath
3016.1	Calibration, tension testing machine
3021.1	Tensile strength, insulation and sheath
3031.1	Elongation, insulation and sheath
3041.1	Tensile stress, insulation and sheath
3111.1	Tearing strength, sheath
3161.1	Tension set, insulation and sheath
3171.1	Tensile strength, varnished cloth insulation

NUMERICAL INDEX OF TEST METHODS – Continued

Method number	Title
3211.1	Tensile strength and elongation, soft or annealed conductors
3212.1	Tensile strength and elongation, medium hard-drawn or hard drawn conductors
4001.1	Resistance to heat, oxygen, air, light and ozone; general
4011.1	Oxygen pressure test, insulation and sheath
4021.1	Air pressure test, insulation and sheath
4031.1	Air oven test, insulation and sheath
4041.1	Test tube heat-aging, insulation and sheath
4111.1	Resistance to ozone, insulation and sheath
4131.1	Resistance to light, insulation and sheath
4211.1	Resistance to petrolatum, varnished cloth
4221.1	Resistance to oil, insulation and sheath
4223.1	Resistance to oil, insulation and sheath (recovery method)
5011.1	Heat shock, insulation
5021.1	Heat distortion, insulation
5031.1	High temperature
5111.1	Melt, fibrous covering
5131.1	Drip, fibrous covering
5141.1	Drip, cable
5211.1	Flammability, horizontal
5221.1	Flammability, vertical
5231.1	Flammability, spark method
6011.1	Resistance, electrical, steel armor
6021.2	Resistance, electrical, conductor
6031.1	Resistance, electrical, insulation
6041.1	Surface resistance, finished wire and cable
6111.1	Voltage withstand, insulated wire and cable

NUMERICAL INDEX OF TEST METHODS – Continued

Method number	Title
6121.1	Voltage withstand, insulation flexing
6131.1	Voltage withstand, insulation, flexing, low temperature
6211.2	Insulation defects, spark test
6221.1	Dielectric strength, cloth and tape
6271.1	Capacitance change with time in water
7001.1	Chemical tests; general
7011.1	Resistance to acid and alkali
7021.3	Fluid immersion
7111.1	Zinc coating, steel armor
7121.1	Conductor coating, sodium polysulfide
7123.1	Conductor coating, ammonium persulfate
7211.1	Mineral content, coverings
7231.1	Lead sheath, composition
7251.1	Identification, synthetic elastomers, insulation and sheath
8011.1	Picks per inch, braid
8021.1	Carriers, ends per carrier, and ply of yarns, braid
8031.1	Yarns per inch, fibrous covering
8033.1	Yarns per inch, varnished cloth
8041.1	Yarn size, wrap and serving
8111.1	Direction of lay
8121.1	Coverage, braid, metal armor
8131.1	Coverage, wrap or serving
8211.1	Moisture absorption, insulation
8221.1	Moisture absorption, fibrous covering
8231.1	Insulation shrinkage (molten solder method)
8311.1	Weight, wire or cable, conductor and covering material
8321.1	Specific gravity, pyncometer
8322.1	Specific gravity, hydrostatic

SECTION 5

SUBJECT INDEX

Subject	Index
Acid, alkali test: Fibrous coverings and armor - -	Method 7011.1
Air oven test: Insulation and sheath - - - - - - - - -	Method 4031.1
Air pressure test: Insulation and sheath - - - - - -	Method 4021.1
Angle:	
Braid -	Method 1611.1
Metal armor, braided - - - - - - - - - - - - - - - - - - -	Method 1631.1
Wrap -	Method 1621.1
Armor:	
Braided metal:	
Angle -	Method 1631.1
Coverage -	Method 8121.1
Elongation -	Method 2111.1
Thickness -	Method 1221.1
Metal tape:	
Coating, uniformity -	Method 7111.1
Elongation -	Method 2111.1
Flexibility, low temperature - - - - - - - - - - - - - -	Method 2021.1
Lay, direction of -	Method 8111.1
Opening -	Method 2181.1
Thickness -	Method 1211.1
Tightness -	Method 2171.1
Width -	Method 1411.1
Nonmetallic: Acid and alkali resistance - - - - - -	Method 7011.1
Steel:	
Coating, zinc, uniformity - - - - - - - - - - - - - - - - -	Method 7111.1
Elongation -	Method 2111.1
Flexibility, low temperature - - - - - - - - - - - - - -	Method 2021.1
Opening -	Method 2181.1
Resistance, electrical - - - - - - - - - - - - - - - - - -	Method 6011.1
Tightness -	Method 2171.1
Wire: Diameter -	Method 1421.1
Armor wire:	
Lay:	
Direction of -	Method 8111.1
Of twist -	Method 1511.1
Springiness -	Method 2161.1
Toughness -	Method 2131.1
Bedding:	
Lay, direction of -	Method 8111.1
Thickness -	Methods 1171.1 and 1173.1
Braid:	
Angle -	Method 1611.1
Carriers -	Method 8021.1
Ends -	Method 8021.1
Picks per inch -	Method 8011.1
Ply of yarn -	Method 8021.1
Thickness -	Method 1111.1
Buffing: Insulation and sheath - - - - - - - - - - - - - -	Method 3011.1
Bunched lay: Definition of - - - - - - - - - - - - - - - - -	Section 5
Calibration: Tension testing machine - - - - - - - - -	Method 3016.1
Capacitance: Insulation, change - - - - - - - - - - - -	Method 6271.1
Carriers:	
Braid -	Method 8021.1
Definition of - - - - - - - - - - - - - - - - - -	Section 5
Chemical tests	Group 7000
Circular mil: Definition of	Section 5
Circumference:	
Cable and wire - - - - - - - - - - - - - -	Method 1441.1
Conductors - - - - - - - - - - - - - - - -	Method 1441.1
Coatings:	
Armor, zinc coated steel - - - - - -	Method 7111.1
Conductor coatings:	
Persulfate - - - - - - - - - - - - - - - - -	Method 7123.1
Polysulfide - - - - - - - - - - - - - - - -	Method 7121.1
Completed wire and cable:	
Definition of - - - - - - - - - - - - - - -	Section 5
Composition:	
Insulation and sheath - - - - - - - -	Method 7251.1
Lead sheath - - - - - - - - - - - - - -	Method 7231.1
Concentric lay: Definition of - - - -	Section 5
Conductor:	
Circumference - - - - - - - - - - - - - -	Method 1441.1
Coating, uniformity:	
Persulfate - - - - - - - - - - - - - - -	Method 7123.1
Polysulfide - - - - - - - - - - - - - - -	Method 7121.1
Definition of - - - - - - - - - - - - - - -	Section 5
Elongation:	
Hard-drawn - - - - - - - - - - - - - - -	Method 3212.1
Soft, annealed - - - - - - - - - - - - - -	Method 3211.1
Insulated, definition of - - - - - - - -	Section 5
Lay, direction of - - - - - - - - - - - -	Method 8111.1
Resistance, electrical - - - - - - - -	Method 6021.1
Size -	Method 1431.1
Stranded, definition - - - - - - - - - -	Section 5
Tensile strength:	
Hard-drawn - - - - - - - - - - - - - - -	Method 3212.1
Soft, annealed - - - - - - - - - - - - - -	Method 3211.1
Weight - - - - - - - - - - - - - - - - - - -	Method 8311.1
Cord, electric: Flexibility - - - - - - - -	Method 2031.1
Coverage:	
Armor, braided metal - - - - - - - - -	Method 8121.1
Wrap or serving - - - - - - - - - - - - -	Method 8131.1
Covering, fibrous:	
Acid and alkali resistance - - - - - -	Method 7011.1
Flammability:	
Horizontal - - - - - - - - - - - - - - - -	Method 5211.1
Spark - - - - - - - - - - - - - - - - - - -	Method 5231.1
Vertical - - - - - - - - - - - - - - - - - -	Method 5221.1
Mineral content - - - - - - - - - - - - -	Method 7221.1
Moisture absorption - - - - - - - - - -	Method 8221.1
Yarns per inch - - - - - - - - - - - - - -	Method 8031.1
Weight - - - - - - - - - - - - - - - - - - -	Method 8311.1
Defects:	
Insulation, spark test - - - - - - - - - -	Method 6211.2
Definitions of terms - - - - - - - - - - - -	Section 5
Diameter: Armor, wire - - - - - - - - - -	Method 1421.1
Dielectric strength: Cloth and tape -	Method 6221.1
Direction of lay	
Definition of- - - - - - - - - - - - - - - - -	Section 5
Determination of - - - - - - - - - - - - -	Method 8111.1

SUBJECT INDEX – Continued

Subject	Index
Distortion, heat: Insulation - - - - - - - -	Method 5021.1
Drip test:	
Cable -	Method 5141.1
Fibrous covering - - - - - - - - - - - - - - -	Method 5131.1
Elastomers: Qualitative tests - - - - - -	Method 7251.1
Elongation:	
Armor -	Method 2111.1
Conductors:	
Hard-drawn - - - - - - - - - - - - - - - - -	Method 3212.1
Soft annealed - - - - - - - - - - - - - - -	Method 3211.1
Definition of - - - - - - - - - - - - - - - - -	Section 5
Insulation and sheath - - - - - - - - - - -	Method 3031.1
Ends:	
Definition of - - - - - - - - - - - - - - - - -	Section 5
Ends per carrier, braid - - - - - - - - - -	Method 8021.1
Flammability - - - - - - - - - - - - - - - - - -	Methods 5211.1 and 5221.1
Spark test - - - - - - - - - - - - - - - - - - -	Method 5231.1
Flexibility:	
Armored cable, low temperature - - -	Method 2021.1
Cord, electric, cotton covered - - - - -	Method 2031.1
Cord, Extensile and Retractile - - - - -	Method 2051.1
Fibrous coverings:	
Low temperature - - - - - - - - - - - - - -	Method 2043.1
Room temperature - - - - - - - - - - - - -	Method 2041.1
Insulation, low temperature - - - - - - -	Method 2011.1
Heat distortion: Insulation - - - - - - - -	Method 5021.1
Heat shock: Insulation - - - - - - - - - - -	Method 5011.1
Insulation:	
Air oven test - - - - - - - - - - - - - - - - -	Method 4031.1
Air pressure test - - - - - - - - - - - - - -	Method 4021.1
Capacitance test - - - - - - - - - - - - - -	Method 6271.1
Composition, qualitative tests - - - - -	Method 7251.1
Defects, spark test - - - - - - - - - - - - -	Method 6211.2
Definition of - - - - - - - - - - - - - - - - - -	Section 5
Elastomers, qualitative tests - - - - - -	Method 7251.1
Elongation - - - - - - - - - - - - - - - - - -	Method 3031.1
Flammability - - - - - - - - - - - - - - - -	Methods 5211.1, 5221.1, and 5231.1
Flexibility, low temperature - - - - - - -	Method 2011.1
Flexing -	Methods 6121.1 and 6131.1
Heat distortion - - - - - - - - - - - - - - - -	Method 5021.1
Heat shock - - - - - - - - - - - - - - - - - -	Method 5011.1
Light resistance - - - - - - - - - - - - - - -	Method 4131.1
Moisture absorption, mechanical - - -	Method 8211.1
Oil resistance - - - - - - - - - - - - - - - -	Methods 4221.1 and 4223.1
Oxygen pressure test - - - - - - - - - - -	Method 4011.1
Ozone resistance - - - - - - - - - - - - - -	Method 4111.1
Petrolatum resistance - - - - - - - - - - -	Method 4211.1
Specific gravity:	
Hydrostatic -	Method 8322.1
Pycnometer -	Method 8321.1
Tensile strength:	
Rubber -	Method 3021.1
Varnished cloth - - - - - - - - - - - - - - - - - - -	Method 3171.1
Tensile stress -	Method 3041.1
Tension set -	Method 3161.1
Test tube heat-aging test - - - - - - - - - - - - - -	Method 4041.1
Thickness:	
Dial micrometer -	Method 1013.1
Micrometer caliper - - - - - - - - - - - - - - - - - -	Method 1011.1
Optical -	Method 1018.1
Pin-gage dial micrometer - - - - - - - - - - - - -	Method 1014.1
Voltage withstand:	
Insulated wire and cable - - - - - - - - - - - - - -	Method 6111.1
After flexing -	Method 6121.1
After flexing at low temperature - - - - - - - - -	Method 6131.1
Lay:	
Bunched, definition of - - - - - - - - - - - - - - - -	Section 5
Concentric, definition of - - - - - - - - - - - - - -	Section 5
Direction of:	
Definition of -	Section 5
Determination of - - - - - - - - - - - - - - - - - - -	Method 8111.1
Length of:	
Definition of -	Section 5
Wrap or serving - - - - - - - - - - - - - - - - - - -	Method 1531.1
Rope, definition of - - - - - - - - - - - - - - - - - -	Section 5
Twist:	
Definition -	Section 5
Armor wire -	Method 1511.1
Cable -	Method 1521.1
Unidirectional, definition of - - - - - - - - - - - -	Section 5
Unilay, definition of - - - - - - - - - - - - - - - - - -	Section 5
Lead: Chemical analysis - - - - - - - - - - - - - -	Method 7231.1
Length of lay:	
Definition of -	Section 5
Wrap or serving - - - - - - - - - - - - - - - - - - -	Method 1531.1
Light resistance: Insulation and sheath - - - -	Method 4131.1
Median: Definition of - - - - - - - - - - - - - - - - -	Section 5
Melt test: Fibrous covering - - - - - - - - - - - - -	Method 5111.1
Mineral content: Fibrous covering - - - - - - - -	Method 7211.1
Moisture absorption:	
Fibrous covering -	Method 8221.1
Insulation -	Method 8211.1
Oil resistance: Insulation and sheath- - - - - -	Methods 4221.1 and 4223.1
Opening: Armor -	Method 2181.1
Overlap: Cotton tape - - - - - - - - - - - - - - - - -	Method 1711.1
Oxygen pressure test:	
Insulation and sheath - - - - - - - - - - - - - - - -	Method 4011.1
Ozone resistance: Insulation and sheath - - -	Method 4111.1

SUBJECT INDEX - Continued

Subject	Index
Resistance	
Definition of	Section 5
Determination of	Method 6031.1
Set, tension	Method 6031.1
Spark test	Method 6211.2
Picks:	
Braids, picks per inch	Method 8011.1
Per inch, definition of	Section 5
Pitch diameter: Definition of	Section 5
Ply:	
Braid, ply of yarn	Method 8021.1
Definition of	Section 5
Yarn, definition of	Section 5
Resistance:	
Abrasion	Method 2211.2
Surface, Finished Wire and Cable	Method 6041.1
Resistance, electrical:	
Armor, steel	Method 6011.1
Conductor	Method 6021.1
Insulation	Method 6031.1
Rope lay: Definition of	Section 5
Serving or wrap:	
Angle	Method 1621.1
Coverage	Method 8131.1
Lay:	
Direction of	Method 8111.1
Length of	Method 1431.1
Thickness:	
Diameter tape	Method 1153.1
Micrometer caliper	Methods 1141.1 and 1151.1
Yarn size	Method 8041.1
Sheath:	
Lead:	
Composition	Method 7231.1
Thickness:	
Micrometer caliper, flat anvil	Method 1313.1
Micrometer caliper, round anvil	Method 1311.1
Plastic, rubber:	
Air oven test	Method 4031.1
Air pressure test	Method 4021.1
Composition, qualitative tests	Method 7241.1
Elastomers, qualitative tests	Method 7251.1
Elongation	Method 3031.1
Light resistance	Method 4131.1
Oil resistance	Methods 4221.1 and 4223.1
Oxygen pressure test	Method 4011.1
Ozone resistance	Method 4111.1
Petrolatum resistance	Method 4211.1
Specific gravity	Methods 8321.1 and 8322.1
Tearing strength	Method 3111.1
Tensile strength	Method 3021.1
Tensile stress	Method 3041.1
Tension set	Method 3161.1
Test tube heat-aging	Method 4041.1
Thickness	Method 1331.1
Shielded pair: Definition of	Section 5
Pair:	
Shielded, definition of	Section 5
Twisted, definition of	Section 5
Petrolatum: Resistance, insulation and sheath	Method 4211.1
Softening point: Fibrous coverings	Method 5111.1
Specific gravity:	
Insulation:	
Hydrostatic	Method 8322.1
Pycnometer	Method 8321.1
Springiness: Armor wire	Method 2161.1
Stranded conductor:	
Definition of	Section 5
Tape:	
Cotton:	
Flexibility	Method 2031.1
Lay, direction of	Method 8111.1
Overlap	Method 1711.1
Thickness:	
Dial micrometer	Method 1124.1
Micrometer caliper	Method 1121.1
Varnished cloth:	
Dielectric strength	Method 6221.1
Flammability	Methods 5211.1, 5221.1 and 5231.1
Lay, direction of	Method 8111.1
Tensile strength	Method 3171.1
Thickness	Method 1051.1
Voltage withstand	Methods 6121.1 and 6131.1
Tearing strength:	
Definition of	Section 5
Insulation and sheath	Method 3111.1
Temperature: Testing room humidity and temperature	Section 7
Tensile strength:	
Conductors:	
Hard-drawn copper	Method 3212.1
Soft, annealed copper	Method 3211.1
Definition of	Section 5
Insulation and sheath	Method 3021.1
Varnished cloth	Method 3171.1
Tensile stress:	
Definition of	Section 5
Insulation and sheath	Method 3041.1
Tension set:	
Definition of	Section 5
Insulation and sheath	Method 3161.1
Test tube heat-aging: Insulation and sheath	Method 4041.1
Thickness:	
Armor:	
Braided metal:	
Diameter tape	Method 1223.1
Micrometer caliper	Method 1221.1
Metal tape	Method 1211.1
Braid	Method 1111.1
Insulation:	
Dial micrometer	Method 1013.1
Micrometer caliper	Method 1011.1

SUBJECT INDEX – Continued

Subject	Index
Size:	
Conductor - - - - - - - - - - - - - -	Method 1431.1
Yarn -	Method 804.1
Serving:	
Diameter tape - - - - - - - - -	Method 1153.1
Micrometer caliper - - - - - -	Method 1151.1
Sheath:	
Lead, micrometer caliper:	
Flat anvil - - - - - - - - - - - - -	Method 1313.1
Round anvil - - - - - - - - - - -	Method 1311.1
Plastic, rubber - - - - - - - - - -	Method 1331.1
Shrinkage - - - - - - - - - - - - -	Method 8231.1
Tapes:	
Cotton:	
Dial micrometer - - - - - - -	Method 1124.1
Micrometer caliper - - - - -	Method 1121.1
Metal - - - - - - - - - - - - - - - -	Method 1211.1
Varnished cloth and tape - -	Method 1051.1
Wrap - - - - - - - - - - - - - - - -	Method 1141.1
Thread: Fibrous covering - - - -	Method 8031.1
Tightness: Armor - - - - - - - - - -	Method 2171.1
Toughness: Armor wire - - - - - -	Method 2131.1
Twisted pair: Definition of - - - -	Section 5
Varnished cloth and tape:	
Dielectric strength - - - - - - - -	Method 6221.1
Flammability - - - - - - - - - - - - -	Methods 5211.1, 5221.1, and 5231.1
Flexing, resistance - - - - - - - - -	Method 2021.1
Lay, direction of - - - - - - - - - - -	Method 8111.1
Optical - - - - - - - - - - - - - - - -	Method 1018.1
Pin-gage dial micrometer - - -	Method 1014.1
Jute bedding:	
Diameter tape - - - - - - - - - - - -	Method 1173.1
Micrometer caliper - - - - - - -	Method 1171.1
Resistance to petrolatum - - -	Method 2021.1
Tensile strength - - - - - - - - - -	Method 3171.1
Thickness - - - - - - - - - - - - - -	Method 1051.1
Voltage withstand, after flexing:	
Low temperature - - - - - - - - -	Method 6131.1
Room temperature - - - - - - -	Method 6121.1
Voltage withstand:	
Cable and wire - - - - - - - - - -	Method 6111.1
Insulation - - - - - - - - - - - - - -	Methods 6121.1 and 6131.1
Weight:	
Cable and wire - - - - - - - - - -	
Conductor - - - - - - - - - - - - - -	Method 8311.1
Covering material - - - - - - - -	Method 8311.1
Width: Armor, metal tape - - - -	Method 8311.1
Wire Definition of - - - - - - - - -	Method 1411.1
Wrap and serving:	Section 5
Angle of yarn - - - - - - - - - - - -	
Coverage - - - - - - - - - - - - - -	Method 1621.1
Lay:	Method 8131.1
Direction of - - - - - - - - - - - -	
Length of - - - - - - - - - - - - - -	Method 8111.1
Thickness - - - - - - - - - - - - - -	Method 1531.1
Yarn size - - - - - - - - - - - - - - -	Method 1141.1
Yarn: Size, definition of - - - - -	Method 8041.1 Section 5

SECTION 6

DEFINITION OF TERMS

1. DEFINITION

1.1 The following definitions cover general terms.

2. GENERAL TERMS

2.1 Bunched lay. In a bunched lay conductor, the strands are twisted together in the same direction without regard to geometrical arrangement.

2.2 Carrier. A carrier is the yarn or combination of several yarns laid parallel in the braid by a single bobbin of the braiding machine.

2.3 Circular mil. A circular mil is a unit of area equal to $\pi/4$ or 78.54 percent of a square mil. The cross-section area of a circle in circular mils is, therefore, equal to the square of its diameter in mils. A circular inch is equal to 1,000,000 circular mils.

2.4 Completed wire or cable. A completed wire or cable is one on which all manufacturing operations have been completed and which is offered for inspection.

2.5 Concentric lay. A concentric lay conductor or cable is composed of a central core surrounded by one or more layers of helically wound strands or insulated conductors. It is optional for the successive layers to be alternately reversed in direction of lay (true concentric lay) or to be in the same direction (unidirectional lay).

2.6 Conductor. A conductor is a wire of circular cross section or a group of wires not usually insulated from one another, suitable for transmitting a single electric current.

2.7 Direction of lay. The direction of lay is the lateral direction, either right-hand or left-hand, in which a strand or insulated conductor passes over the top as it recedes from an observer looking along the axis of the conductor or cable.

2.8 Elongation. Elongation is the permanent extension in the gage length of a test specimen, measured after rupture, and expressed as a percentage of the original gage length. Ultimate elongation is the extension measured at the moment of rupture and expressed as a percentage of the original gage length. For example, if a 1-inch gage is marked on an unstretched specimen and the specimen is stretched until the gage marks are 7 inches apart, elongation is 7-1 inch = 6 inches or 600 percent.

2.9 End. An end is an individual warp yarn.

2.10 Finished conductor. A finished conductor is the metal conductor with insulation and any covering present before assembling into a complete cable.

2.11 Insulated conductor (insulated wire): An insulated conductor (insulated wire) is a conductor (wire) surrounded by a layer or layers of non-conducting material (insulation) which isolates the conductor (wire) from other conducting materials or from ground.

2.12 Insulation. Insulation is non-conducting material used to separate a conducting material from other conductors or from ground.

2.13 Insulation resistance. The insulation resistance of an insulated conductor is the electrical resistance offered by its insulation to an impressed direct-current potential tending to produce a leakage of current through the same.

2.14 Lay of twist. The lay of twist is the ratio of the length of lay to the diameter of an individual finished conductor or to the pitch diameter of any layer of conductors of which the cable is composed.

2.15 Length of lay. The length of lay of any helically wound strand of insulated conductor is the axial length of one complete turn of the helix, usually expressed in inches.

2.16 Median. When the numerical values for a given property are arranged in ascending or descending order, the median is obtained as follows:

a. When the number of values is odd, the median is the middle value in the series.

b. When the number of values is even, the median is the arithmetic average of the two middle values.

2.17 Picks per inch. Picks per inch is the number of carriers in either direction contained in 1 inch of the braid measured parallel to the axis of the finished wire or cable.

2.18 Pitch diameter. The pitch diameter of any layer of conductors of a cable is the diameter of the circle passing through their centers.

2.19 Ply. A ply is an individual single yarn in a ply yarn.

2.20 Ply yarn. A ply yarn is the product formed by twisting together two or more single yarns.

2.21 Rope lay. In a rope-lay conductor the stranded members are twisted together with a concentric lay, and the stranded members themselves may have either a bunched, concentric, or rope lay.

2.22 Shielded pair. A shielded pair is a twisted pair over which a close braid of copper wire has been applied.

2.23 Stranded conductor. A stranded conductor is a conductor composed of more than one wire.

2.24 Tearing strength. Tearing strength is the ratio of the maximum force applied during tear of a specimen to the thickness of the unstretched specimen.

2.25 Tensile strength. Tensile strength is the maximum force per unit of the original cross-sectional area of the specimen which results in the rupture of the specimen. It is calculated by dividing the maximum force in pounds by the original cross-sectional area in square inches.

2.26 Tensile stress. Tensile stress is the force per unit of original cross-sectional area of the unstretched specimen required to stretch the specimen to a stated elongation. It is expressed in pounds of tension force per square inch at the stated elongation. For example, 1,000 pounds per square inch at 500 percent elongation. It is often designated in rubber technology by the term “modulus”.

2.27 Tension set. Tension set is the elongation remaining after a specimen has been stretched and held at a specified elongation for a given period of time, then has been relieved of the force, and is allowed to rest for a definite period of time. It is expressed as a percentage of the distance between the bench marks on the unstretched specimen. For example, a specimen is stretched from 1 to 5 inches for a period of 10 minutes and then released. Its length after the 10 minutes rest is 1.2 inches; therefore, the set under these conditions is 0.2 inch or 20 percent.

2.28 Twisted pair. A twisted pair is composed of two insulated conductors twisted together.

2.29 Unidirectional lay. Unidirectional lay is that variation of concentric lay in which all the helical layers of strands comprising the concentric conductor have the same direction of lay. The construction includes normal unidirectional lay, in which each successive layer has a greater lay length than the preceding layer, and unidirectional equal lay (unilay), generally limited to 19 strands, in which all helical layers have the same length of lay.

2.30 Unilay. See “unidirectional equal lay” under “unidirectional lay”.

2.31 Wire. A wire is a slender rod of filament of drawn metal.

2.32 Yarn size. Yarn size (yarn number) is a conventional relative measure of fineness or dimension. It is expressed as the number of standard lengths per standard weight of the material.

SECTION 7

TEMPERATURE AND HUMIDITY OF CONDITIOINING ROOM

1. CONDITIONING

1.1 Standard atmosphere. Unless otherwise specified, all physical tests of wire and cable should be made at a room temperature of 27° ± 5°C. (80° ± 9°F.) except in the case of dispute or disagreement between laboratories. It is intended that the laboratory be maintained as closely as possible to 23°C. and a relative humidity of 50 percent. The tolerances indicated are meant to cover variations from these specified conditions which may occur at different locations in the room.

1.2 Dispute testing. In the case of dispute or disagreement between the laboratories, unless otherwise specified, the specimen should be conditioned in an atmosphere of 50 ± 4 percent relative humidity and a temperature of 23° ± 1°C. (73.5° ± 2°F).

1.3 Time of conditioning. Unless otherwise specified, the specimens should be conditioned for not less than 3 hours before being tested and should be tested in the same atmosphere.

SECTION 8

NOTES

(Activities outside the Federal Government may obtain copies of Federal Specifications, Standards, and Handbooks as outlined under General Information in the Index of Federal Specifications and Standards and at the prices indicated in the Index. The Index, which includes cumulative monthly supplements as issued, is for sale on a subscription basis by the Superintendent of Documents, U. S. Government Printing Office, Washington, D. C. 20402.

(Single copies of this specification and other product specifications required by activities outside the Federal Government for bidding purposes are available without charge at the General Services Administration Regional Offices in Boston, New York, Washington, D. C., Atlanta, Chicago, Kansas City, Mo., Dallas, Denver, San Francisco, Los Angeles, and Seattle, Wash.

(Federal Government activities may obtain copies of Federal Specifications, Standards, and Handbooks and the Index of Federal Specifications and Standards from established distribution points in their agencies.)

Section 1000

Geometrical Measurements

Method 1011.1
18 April 2014

THICKNESS, INSULATION; MICROMETER CALIPER

1. SCOPE

1.1 This method is intended for use in determining the thickness of the insulation of insulated wire and cable. It is not recommended for use when the thickness of the insulation is less than 3/64 inch.

2. SPECIMEN

2.1 The specimen should be a piece of the inspection unit at least 2 feet in length from which any covering over the insulation has been removed.

3. APPARATUS AND REAGENTS

3.1 The apparatus and reagents should be as follows:

3.1.1 Micrometer caliper graduated to read in mils of 0.0001 inch and having flat surfaces on both anvil and end of spindle, each approximately 0.25 inch in diameter. The surfaces of anvil and spindle should be parallel to within 0.0001 inch.

3.1.2 Wiping cloth.

3.1.3 Alcohol or other suitable solvent.

4. PROCEDURE

4.1 Average thickness.

4.1.1 The specimen shall be free from mechanical damage. Any saturants or other extraneous materials shall be removed from the specimen by means of the cloth and solvent. The micrometer caliper shall be applied directly over the insulation so that the specimen can just be moved between the anvil and the spindle without distortion of the insulation. The diameter over the insulation shall be read from the micrometer caliper scale and the value recorded as D_1.

4.1.2 The insulation shall then be removed from the conductor and the diameter over the conductor or the separator (if one is used) measured as described above and the value recorded as D_2. If a separator is present, the diameter over the separator shall be measured as described for the diameter over the insulation. If a separator is not present, the anvil and spindle of the caliper shall just be brought into contact with the surface of the conductor in such a manner that the conductor is not distorted. The criterion of contact is the initial development of frictional resistance to movement of the conductor between the micrometer surfaces.

4.1.3 Three sets of measurements equally spaced along the length of the specimen shall be made. Each set of measurements shall consist of the maximum and minimum diameters at the place measured. The diameter over the insulation and over the conductor or separator (if one is used) shall be determined as nearly as practicable at the same point.

4.2 Minimum thickness.

4.2.1 The inspection unit shall be examined for thin places in the insulation. The specimen shall be taken from the inspection unit so as to include the point where the insulation is considered the thinnest and shall be free from mechanical damage. Any saturants or extraneous materials shall be removed from the insulation by means of the cloth and solvent. The insulation shall be removed from the specimen on the side opposite the point considered thinnest. A measurement including the thickness of the insulation at the point considered thinnest and the diameter of the conductor or separator (if one is used) shall be made by applying the caliper in the manner described in 4.1.1 for determining the diameter over the insulation and the value recorded as d_1.

4.2.2 The insulation at the point considered thinnest shall then be removed from the conductor and the diameter over the conductor or separator (if one is used) measured as described in 4.1.2 and the value recorded as d_2.

4.2.3 The measurement over the insulation and the diameter over the conductor or separator shall be determined as nearly as practicable at the same point.

4.2.4 If no thinnest point is located in the insulation of the inspection unit, the procedure shall be as described in 4.1.

5. RESULTS

5.1 Calculations.

5.1.1 Average thickness. The thickness of the insulation at any point should be calculated as follows:

$$\text{Thickness, inch} = \frac{D_1 - D_2}{2}$$

Where:
D_1 = the diameter over the insulation at the point measured, inches
D_2 = the diameter over the conductor or separator at the point measured, inches

5.1.2 Minimum thickness. The minimum thickness of the insulation should be calculated as follows:

$$\text{Thickness, inch} = d_2 - d_1$$

where:

d_1=the thickness over the insulation and conductor or separator at the thinnest point, inches

d_2=the diameter over the conductor or separator, inches

5.2 Average thickness.

5.2.1 Unless otherwise specified in the detail specification, three specimens from each inspection unit should be tested.

5.2.2 The average thickness of the insulation of the inspection unit should be the average of the results obtained from the specimens tested.

5.3 Minimum thickness.

5.3.1 If a thinnest point is found in the insulation of the inspection unit (4.2), the minimum thickness of the insulation of the inspection unit should be the thickness of the insulation obtained at that point.

5.3.2 If no thinnest point is found in the insulation of the inspection unit (4.2), the minimum thickness of the insulation of the inspection unit should be the smallest of all values averaged in determining the average thickness, 5.2.2.

5.4 The average thickness and minimum thickness of the insulation of the inspection unit should be recorded to the nearest mil or 0.001.

Method 1013.1
18 April 2014

THICKNESS, INSULATION; DIAL MICROMETER

1. SCOPE

1.1 This method is intended for use in determining the thickness of the insulation of insulated wire and cable. It is not recommended for use when the nominal thickness of the insulation is less than 3/64 inch. It is faster than method 1011.

2. SPECIMEN.

2.1 The specimen should be a piece of the inspection unit at least 2 feet in length from which any covering over the insulation has been removed.

3. APPARATUS AND REAGANTS

3.1 The apparatus and reagents should be as follows:

3.1.1 Dial micrometer with a flat anvil and a flat pressure foot 0.078 ± 0.003 inch wide and 0.375 ± 0.015 inch long which exerts a total force of 10 ± 2.0 grams on the specimen, the force being applied by means of a weight. The surfaces of the anvil and pressure foot should be parallel to within 0.0001 inch. The dial should be graduated to read in mile or 0.0001 inch.

3.1.2 Wiping cloth.

3.1.3 Alcohol or other suitable solvent.

4. PROCEDURE

4.1 Average thickness.

4.1.1 The specimen shall be free from mechanical damage. Any saturants or other extraneous materials shall be removed from the specimen by means of the cloth and solvent. The specimen shall be placed on the anvil of the micrometer and the presser foot lowered gently (not dropped) until it contacts the surface of the insulation. The diameter over the insulation shall be read from the dial and the value recorded as D_1.

4.1.2 The insulation shall then be removed from the conductor and the diameter over the conductor or the separator (if one is used) measured as described above and the value recorded as D_2.

4.1.3 Three sets of measurements equally spaced along the length of the specimen shall be made. Each set of measurements shall consist of the maximum and minimum diameters at the place measured. The diameter over the insulation and over the conductor or separator (if one is used) shall be determined as nearly as practicable at the same point.

4.2 Minimum thickness.

4.2.1 The inspection unit shall be examined for thin places in the insulation. The specimen shall be taken from the inspection unit so as to include the point where the insulation is considered the thinnest and shall be free from mechanical damage. Any saturants or extraneous materials shall be removed from the insulation by means of the cloth and solvent.

4.2.2 The insulation shall be removed from the specimen on the side opposite the point considered thinnest. A measurement including the thickness of the insulation at the point considered thinnest and the diameter of the conductor or separator (if one is used) shall be made by applying the dial micrometer in the manner described in 4.1.1 for determining the diameter over the insulation and the value recorded as d_1. The insulation at the point considered thinnest shall then be removed from the conductor and the diameter over the conductor or separator (if one is used) measured as described in 4.1.2 and the value recorded as d_2.

4.2.3 The measurement over the insulation and the diameter over the conductor or separator shall be determined as nearly as practicable at the same point.

4.2.4 If no thinnest point is located in the insulation of the inspection unit, the procedure shall be as described in 4.1.

5. RESULTS

5.1 The results shall be described in method 1011.

Method 1014.1
18 April 2014

THICKNESS, INSULATION, MINIMUM; PIN-GAGE DIAL MICROMETER

1. SCOPE

1.1 This method is intended for use in determining the minimum thickness of the insulation of insulated wire and cable. It is recommended for use when the thickness of the insulation is less than 3/64 inch. It is more rapid than method 1018 but is less accurate. It is not applicable to the insulation from a stranded conductor or when the diameter of the conductor is less than 0.042 inch.

2. SPECIMEN

2.1 The specimen should be a piece of the inspection unit approximately 3 inches in length from which any covering over the insulation, and the separator and conductor have been removed without splitting the insulation. The inner wall of the specimen should not be torn or damaged in removing the separator or conductor.

3. APPARATUS AND REAGENTS

3.1 The apparatus and reagents should be as follows:

3.1.1 A pin-gage dial micrometer with a fixed pin 0.042 ± 0.0001 inch in diameter and ¾ ± 1/16 inch in length as the anvil and a flat presser foot 0.042 ± 0.0001 inch wide and 0.312 ± 0.002 inch long, which exert a total force of 25 ± 2 grams on the specimen, the force being applied by means of a weight. The micrometer should be graduated to read in mils of 0.0001 inch.

3.1.2 Wiping cloth.

3.1.3 Alcohol or other suitable solvent.

4. PROCEDURE

4.1 The inspection unit shall be examined for thin places in the insulation. The specimen shall be taken from the inspection unit so as to include the point where the insulation is considered the thinnest and shall be free from mechanical damage. Any saturants or extraneous materials shall be removed from the insulation by means of the cloth and solvent. The specimen shall be slipped over the pin of the micrometer and the presser foot lowered gently (not dropped) until it contacts the outer surface of the insulation. The thickness of the insulation shall be read from the dial immediately after the presser foot has come to rest on the specimen. The specimen shall be rotated and at least 5 measurements made around the circumference of the specimen in order to find the minimum thickness which shall be recorded. The presser foot of the gage shall not be in contact with the specimen while it is being rotated.

4.2 If no thinnest point is located in the insulation of the inspection unit, and useless otherwise specified in the detail specification, three specimens from the inspection unit shall be tested.

5. RESULTS

5.1 If a thinnest point is found in the insulation of the inspection unit, 4.1, the minimum thickness of the insulation of the inspection unit should be the thickness of the insulation obtained at that point.

5.2 If no thinnest point is found in the insulation of the inspection unit, the minimum thickness of the insulation of the inspection unit should be the smallest of all values obtained from the specimens tested.

5.3 The minimum thickness of the insulation of the inspection unit should be recorded to the nearest mil or 0.0001 inch.

Method 1018.1
18 April 2014

THICKNESS, INSULATION; OPTICAL

1. SCOPE

1.1 This method is intended for use in determining the thickness of the insulation of insulated wire and cable. It is more accurate than methods 1011 and 1013. This method is recommended for use where a high degree of accuracy and precision is desired. In case a dispute arises as to method for determining the thickness of insulation, this method should be used wherever applicable.

2. SPECIMEN

2.1 The specimen should be a short length of the inspection unit with full cross-section of the insulation cut perpendicular to the axis of the wire or cable.

3. APPARATUS AND REAGENTS

3.1 The apparatus and reagents should be as follows:

3.1.1 Microscope equipped with devices capable of making measurements accurate to at least 0.0002 inch.

3.1.2 A suitable instrument is a standard microscope equipped with a 6- or 8-power eyepiece, an objective of 48-millimeter focal length, a mechanical stage, and a ruled glass disc or slide.

3.1.3 Wiping cloth.

3.1.4 Alcohol or other suitable solvent.

4. PROCEDURE

4.1 Average thickness.

4.1.1 the specimen shall be free from mechanical damage and shall be cut perpendicular to the axis of the wire or cable so as to expose the full cross-sectional area of insulation. Any saturants or other extraneous materials shall be removed from the specimen by means of the cloth and solvent.

4.1.2 When the apparatus described in 3.1.2 is used, the ruled glass disc or slide shall be placed on the cut surface of the cross section of the specimen with the ruled surface in contact with the insulation. The thickness of the insulation, if not more than ¼ inch, will be in the field of view and shall be read directly from the rulings. If the thickness is such that it does not all lie in the field of view and cannot be read directly, the specimen shall be moved by means of the mechanical stage until the inner edge of the insulation is tangent to a cross hair in the ocular. The specimen shall be moved by means of the stage until the outer edge of the insulation is tangent to the cross hair. The rulings on the disc or slide passed over during the movement shall be counted and the value recorded.

4.1.3 When an apparatus with a scale in the eyepiece is used, the ruled glass disc shall be placed in the ocular and calibrated. The specimen shall be placed on the state so as to expose the full thickness of the insulation. The microscope shall be focused on the specimen and the thickness of the insulation determined by counting the divisions of the ruled disc in the eyepiece which cover the distance from the inner edge to the outer edge of the insulation and the value recorded.

4.1.4 One set of measurements on each specimen shall be made. Each set of measurements shall consist of the maximum and minimum thickness.

4.2 Minimum thickness.

4.2.1 The inspection unit shall be examined for thin places in the insulation. A specimen shall be cut perpendicular to the axis of the wire or cable so as to expose for measurement the point where the insulation is considered the thinnest. The thickness of the thinnest point of the insulation shall then be measured as described in 4.1.

4.2.2 If no thinnest point is located in the insulation of the inspection unit, the procedure shall be as described in 4.1.

5. RESULTS

5.1 Average thickness.

5.1.1 Unless otherwise specified in the detail specification, five specimens from each inspection unit shall be tested.

5.1.2 The average thickness of the insulation of the inspection unit shall be the average of the results obtained from the specimens tested.

5.2 Minimum thickness.

5.2.1 If a thinnest point is found in the insulation of the inspection unit, 4.2, the minimum thickness of the insulation of the inspection unit shall be the thickness of the insulation obtained at that point.

5.2.2 If no thinnest point is found in the insulation of the inspection unit, 4.2, the minimum thickness of the insulation of the inspection unit shall be the smallest of all values averaged in determining the average thickness, 5.1.2.

5.3 The average thickness and minimum thickness of the insulation of the inspection unit shall be recorded to the nearest mil of 0.0001 inch.

Method 1051.1
18 April 2014

THICKNESS, VARNISHED CLOTH

1. SCOPE

1.1 This method is intended for use in determining the thickness of varnished cloth.

2. SPECIMEN

2.1 The specimen should be a piece of the varnished cloth at least 12 inches in length taken from a single tape layer of the inspection unit.

3. APPARATUS

3.1 The apparatus should consist of a dial micrometer having a flat anvil not less than 0.25 inch in diameter and a flat presser foot 0.25 ± 0.01 inch in diameter which exerts a total force of 3.0 ± 0.1 ounce on the specimen, the force being applied by means of a weight. The surfaces of the anvil and presser foot should be parallel to within 0.0001 inch. The dial should be graduated to read in mils or 0.0001 inch.

4. PROCEDURE

4.1 At least 12 inches of each tape layer shall be removed from the inspection unit. Unless otherwise specified in the detail specification, 10 percent of the tapes but not less than five tapes shall be selected at random for test.

4.2 The specimen shall be placed on the anvil of the dial micrometer and the presser foot lowered gently (not dropped) until it contacts the surface of the tape. The thickness of the specimen shall be read from the dial and the value recorded. Five measurements equally spaced along the length of the specimen shall be made.

5. RESULTS

5.1 Unless otherwise specified in the detail specification, one specimen from each tape selected for test, 4.1, shall be measured.

5.2 The average thickness of the tape shall be the average of the five measurements made on the specimen tested.

5.3 The minimum thickness of the tape shall be the smallest of all values averaged in determining the average thickness, 5.2.

5.4 The maximum thickness of the tape shall be the largest of all values averaged in determining the average thickness, 5.2.

5.5 The average, minimum, and maximum thicknesses of each tape tested shall be recorded to the nearest mil or 0.0001 inch.

Method 1111.1
18 April 2014

THICKNESS, BRAID

1. SCOPE

1.1 This method is intended for use in determining the thickness of braids over the insulation of insulated wire and cable.

2. SPECIMEN

2.1 The specimen should be a piece of the inspection unit at least 2 feet in length from which any covering over the braid has been removed.

3. APPARATUS AND REAGENTS

3.1 The apparatus and reagents shall be as follows:

3.1.1 Micrometer caliper graduated to read in mils or 0.0001 inch and having flat surfaces on both anvil and end of spindle, each approximately 0.25 inch in diameter. The surfaces of anvil and spindle shall be parallel to within 0.0001 inch.

3.1.2 Wiping cloth.

3.1.3 Alcohol or other suitable solvent.

4. PROCEDURE

4.1 The specimen shall be free from mechanical damage. Any saturants or extraneous materials shall be removed from the braid by means of the cloth and solvent. The micrometer caliper shall be applied directly over the braid so that the specimen can just be moved between the anvil and spindle without distortion of the braid. The diameter over the braid shall be read from the micrometer caliper scale and the value recorded as D_1.

4.2 The braid shall then be removed from the specimen and any saturants or other extraneous materials removed from the surface of the core (assembly under the braid) by means of the cloth and solvent. The diameter over the core shall then be determined as described for diameter over the braid and the value recorded as D_2. This measurement shall be made over the laps of tape or over the tops of any braid marks in the insulation.

4.3 Three measurements equally spaced along the length of the specimen shall be made. The diameter over the braid and over the core shall be determined as nearly as practicable at the same point.

4.4 If two braids are present, the thickness of the outer braid shall be determined from the diameter over the inner braid.

4.5 In determining the thickness of the over-all braid of a twin-conductor cable, the diameter over the core, D_2 in 4.2, shall be equal to 1.64 times the diameter of the individual conductor.

5. RESULTS

5.1 Calculation. The thickness of the braid at any point shall be calculated as follows:

$$\text{Thickness, Inch} = \frac{D_1 - D_2}{2}$$

where:
D_1=the diameter over the braid at the point measured, inches

D_2=the diameter over the core at the point measured, inches

5.2 Unless otherwise specified in the detail specification, three specimens from each inspection unit shall be tested.

5.3 The average thickness of the braid of the inspection unit shall be the average of the results obtained from the specimens tested.

5.4 The minimum thickness of the braid of the inspection unit shall be the smallest of all values averaged in determining the average thickness, 5.3.

5.5 The average thickness and minimum thickness of the braid of the inspection unit shall be recorded to the nearest mil or 0.0001 inch.

Method 1121.1
18 April 2014

THICKNESS, COTTON TAPE; MICROMETER CALIPER

1. SCOPE

1.1 This method is intended for use in determining the thickness of cotton tapes over the insulation of insulated wire and cable. It is not considered as accurate as method 1124.

2. SPECIMEN

2.1 The specimen should be a piece of the inspection unit at least 2 feet in length from which any covering over the tape has been removed.

3. APPARATUS AND REAGENTS

3.1 The apparatus and reagents shall be as follows:

3.1.1 Micrometer caliper graduated to read in mils or 0.0001 inch and having flat surfaces on both anvil and end of spindle, each approximately 0.25 inch in diameter. The surfaces of anvil and spindle shall be parallel to within 0.0001 inch.

3.1.2 Wiping cloth.

3.1.3 Alcohol or other suitable solvent.

4. PROCEDURE

4.1 The specimen shall be free from mechanical damage. The micrometer caliper shall be applied directly over the tape so that the specimen can just be moved between the anvil and the spindle without distortion of the tape. The diameter over the tape shall be read from the micrometer caliper scale and value recorded as D_2. If possible, the measurements shall be made at places where the tape is not lapped.

4.2 The tape shall then be removed from the specimen and any saturants or other extraneous materials removed from the surface of the core (assembly under the tape) by means of the cloth and solvent. The diameter over the core shall then be determined as described for diameter over the tape and the value recorded as D_2. This measurement shall be made over the laps of any tape or over the tops of any marks in the insulation.

4.3 Three measurements equally spaced along the specimen shall be made. The diameter over the tape and over the core shall be determined as nearly as practicable at the same point.

4.4 If more than one layer of tape is present, each layer shall be measured separately.

5. RESULTS

5.1 Calculation. The thickness of the tape at any point shall be calculated as follows:

$$\text{Thickness, inch} = \frac{D_1 - D_2}{2}$$

where:

D_1=the diameter over the tape at the point measured, inches.

D_2=the diameter over the core at the point measured, inches.

5.2 Unless otherwise specified in the detail specification, three specimens from each inspection unit shall be tested.

5.3 The average thickness of the tape of the inspection unit shall be the average of the results obtained from the specimens tested.

5.4 The minimum thickness of the tape of the inspection unit shall be the smallest of all values averaged in determining the average thickness, 5.3.

5.5 The average thickness and minimum thickness of the tape of the inspection unit shall be recorded to the nearest mil or 0.0001 inch.

Method 1124.1
18 April 2014

THICKNESS, COTTON TAPE, DIAL MICROMETER

1. SCOPE

1.1 This method is intended for use in determining the thickness of cotton tape over the insulation of insulated wire and cable.

2. SPECIMEN

2.1 The specimen should be a piece of the tape at least 2 feet in length taken from the inspection unit.

3. APPARATUS

3.1 The apparatus shall consist of a dial micrometer having a flat anvil not less than 0.25 inch in diameter and a flat presser foot 0.25 ± 0.01 inch in diameter which exerts a total force of 3.0 ± 0.1 ounce on the specimen, the force being applied by means of a weight. The surfaces of the anvil and presser foot shall be parallel to within 0.0001 inch. The dial shall be graduated to read in mils or 0.0001 inch.

4. PROCEDURE

4.1 The specimen shall be free from mechanical damage. The specimen shall be placed on the anvil of the dial micrometer and the presser foot lowered gently (not dropped) until it contacts the surface of the specimen. The thickness of the tape shall be read from the dial and the value recorded. Three measurements equally spaced along the length of the specimen shall be made.

4.2 If the wire or cable contains tapes applied in more than one layer, each layer shall be tested separately.

5. RESULTS

5.1 Unless otherwise specified in the detail specification, three specimens from each inspection unit shall be tested.

5.2 The average thickness of the tape of the inspection unit shall be the average of the results obtained from the specimens tested.

5.3 The minimum thickness of the tape of the inspection unit shall be the smallest of all values averaged in determining the average thickness, 5.2.

5.4 The average thickness and minimum thickness of the tape of the inspection unit shall be recorded to the nearest mil or 0.0001 inch.

Method 1141.1
18 April 2014

THICKNESS, WRAP

1. SCOPE

1.1 This method is intended for use in determining the thickness of wraps of insulated wire and cable.

2. SPECIMEN

2.1 The specimen should be a piece of the inspection unit at least 2 feet in length from which any covering over the wrap has been removed.

3. APPARATUS AND REAGENTS

3.1 The apparatus and reagents shall be as follows:

3.1.1 Micrometer caliper graduated to read in mils or 0.0001 inch and having flat surfaces on both anvil and end of spindle, each approximately 0.25 inch in diameter. The surfaces of anvil and spindle shall be parallel to within 0.0001 inch.

3.1.2 Wiping cloth.

3.1.3 Alcohol or other suitable solvent.

4. PROCEDURE

4.1 The specimen shall be free from mechanical damage. The micrometer caliper shall be applied directly over the wrap so that the specimen can just be moved between the anvil and the spindle without distortion of the wrap. The diameter over the wrap shall be read from the micrometer scale and the value recorded as D_1.

4.2 The wrap shall then be removed from the specimen and any fibers, saturants, or other extraneous materials removed from the surface of the core (assembly under the wrap) by means of the cloth and solvent. The diameter over the core shall be measured in the same manner as described for diameter over the wrap and the value recorded as D_2.

4.3 Three measurements equally spaced along the length of the specimen shall be made. The diameter over the wrap and over the core shall be measured as nearly as practicable at the same point.

4.4 If two wraps are present, the thickness of the outer wrap shall be determined from the diameter over the inner wrap.

5. RESULTS

5.1 Calculation. The thickness of the wrap at any point shall be calculated as follows:

$$\text{Thickness, inch} = \frac{D_1 - D_2}{2}$$

where:

D_1=the diameter over the wrap at the point measured, inches.

D_2=the diameter over the core at the point measured, inches

5.2 Unless otherwise specified in the detail specification, three specimens from each inspection unit shall be tested.

5.3 The average thickness of the wrap of the inspection unit shall be the average of the results obtained from the specimens tested.

5.4 The minimum thickness of the wrap of the inspection unit shall be the smallest of all values averaged in determining the average thickness, 5.3.

5.5 The average thickness and minimum thickness of the wrap of the inspection unit shall be recorded to the nearest mil or 0.0001 inch.

Method 1151.1
18 April 2014

THICKNESS, SERVING; MICROMETER CALIPER

1. SCOPE

1.1 This method is intended for use in determining the thickness of the outside serving of armored cable. It is recommended for use when the wire or cable has a diameter of less than one inch.

2. SPECIMEN

2.1 The specimen should be a piece of the inspection unit at least 6 inches in length from which any covering over the serving has been removed.

3. APPARATUS AND REAGENTS

3.1 The apparatus and reagents shall be as follows:

3.1.1 Micrometer caliper graduated to read in mils or 0.0001 inch and having flat surfaces on both anvil and end of spindle, each approximately 0.25 inch in diameter. The surfaces of anvil and spindle shall be parallel to within 0.0001 inch.

3.1.2 Wiping cloth

3.1.3 Alcohol or other suitable solvent.

4. PROCEDURE

4.1 The specimen shall be free from mechanical damage. The micrometer caliper shall be applied directly over the serving so that the specimen can just be moved between the anvil and the spindle without distortion of the serving. The diameter over the serving shall be read from the micrometer caliper scale and the value recorded as D_1.

4.2 The serving shall be removed from the specimen and any fibers, saturants, or other extraneous materials removed from the surface of the core (assembly under the serving) by means of the cloth and solvent.

4.3 The diameter over the core shall be measured in the same manner as described for diameter over the serving, and the value recorded as D_2. The diameters over the serving and over the core shall be determined as nearly as practicable at the same point.

5. RESULTS

5.1 Calculation. The thickness of the serving at any point shall be calculated as follows:

$$\text{Thickness, inch} = \frac{D_1 - D_2}{2}$$

where:

D_1=the diameter over the serving at the point measured, inches.

D_2=the diameter over the core at the point measured, inches.

5.2 Unless otherwise specified in the detail specification, two specimens, one from each end of the inspection unit, shall be tested.

5.3 The thickness of the serving of the inspection unit shall be the average of the results obtained from the specimens tested.

5.4 The thickness of the serving of the inspection unit shall be recorded to the nearest mil or 0.0001 inch.

Method 1153.1
18 April 2014

THICKNESS, SERVING; DIAMETER TAPE

1. SCOPE

1.1 This method is intended for use in determining the thickness of the outside serving of armored cable. It is recommended for use when the wire or cable has an over-all diameter of one inch or more.

2. SPECIMEN

2.1 The specimen should be a piece of the inspection unit at least 6 inches in length from which any covering over the serving has been removed.

3. APPARATUS AND REAGENTS

3.1 The apparatus and reagents shall be as follows:

3.1.1 Diameter tape graduated to read to at least 0.01 inch.

3.1.2 Wiping cloth.

3.1.3 Alcohol or other suitable solvent.

4. PROCEDURE

4.1 The specimen shall be free from mechanical damage. The diameter tape shall be applied directly over the serving of the specimen in such a manner that the serving is not distorted. The diameter over the serving shall be read from the tape and the value recorded as D_1.

4.2 The serving shall then be removed from the specimen and any saturants, fibers, of extraneous materials removed from the surface of the core (assembly under the serving) by means of the cloth and solvent. The diameter over the core shall be measured in the same manner as described for diameter over the serving and the value recorded as D_2.

4.3 The diameters over the serving and over the core shall be measured as nearly as practicable at the same place.

5. RESULTS

5.1 Calculation. The thickness of the serving at any place shall be calculated as follows:

$$\text{Thickness, inch} = \frac{D_1 - D_2}{2}$$

where:

D_1=the diameter over the serving at the place measured, inches.

D_2=the demand over the core at the place measured, inches.

5.2 Unless otherwise specified in the detail specification, two specimens, one from each end of the inspection unit, shall be tested.

5.3 The thickness of the serving of the inspection unit shall be the average of the results obtained from the specimens tested.

5.4 The thickness of the serving of the inspection unit shall be recorded to the nearest 0.01 inch.

Method 1171.1
18 April 2014

THICKNESS, BEDDING; MICROMETER CALIPER

1. SCOPE

1.1 This method is intended for use in determining the thickness of bedding of armored cable. It is recommended for use when the wire or cable has an over-all diameter of less than 1 inch.

2. SPECIMEN

2.1 The specimen should be a piece of the inspection unit at least 6 inches in length from which any covering over the bedding has been removed.

3. APPARATUS AND REAGENTS

3.1 The apparatus and reagents shall be as follows:

3.1.1 Micrometer caliper graduated to read in mils of 0.0001 inch and having flat surfaces on both anvil and end of spindle, each approximately 0.25 inch in diameter. The surfaces of anvil and spindle shall be parallel to within 0.0001 inch.

3.1.2 Wiping cloth.

3.1.3 Alcohol or other suitable solvent.

4. PROCEDURE

4.1 The specimen shall be free from mechanical damage. The micrometer caliper shall be applied directly over the bedding so that the specimen can just be moved between the anvil and the spindle without distortion of the bedding. The diameter over the bedding shall be read from the micrometer caliper scale and the value recorded as D_1.

4.2 The bedding shall be removed from the specimen and any fibers, saturants or extraneous materials removed from the surface of the core “assembly under the bedding” by means of the cloth and solvent. The diameter over the core shall be measured in the same manner as described for diameter over the bedding and the value recorded as D_2. The diameter over the bedding and over the core shall be determined as nearly as practicable at the same point.

5. RESULTS

5.1 Calculation. The thickness of the bedding at any point shall be calculated as follows:

$$\text{Thickness, inch} = \frac{D_1 - D_2}{2}$$

where:

D_1=the diameter over the bedding at the point measured, inches.

D_2=the diameter over the core at the point measured, inches.

5.2 Unless otherwise specified in the detail specification, two specimens, one from each end of the inspection unit, shall be tested.

5.3 The thickness of the bedding of the inspection unit shall be the average of the results obtained from the specimens tested.

5.4 The thickness of the bedding of the inspection unit shall be recorded to the nearest mil or 0.0001 inch.

Method 1173.1
18 April 2014

THICKNESS, BEDDING; DIAMETER TAPE

1. SCOPE

1.1 This method is intended for use in determining the thickness of bedding of armored cable. It is recommended for use when the wire or cable has an over-all diameter of one inch or more.

2. SPECIMEN

2.1 The specimen should be a piece of the inspection unit at least 6 inches in length from which any covering over the bedding has been removed.

3. APPARATUS AND REAGENTS

3.1 The apparatus and reagents shall be as follows:

3.1.1 Diameter tape graduated to read at least 0.01 inch.

3.1.2 Wiping cloth.

3.1.3 Alcohol or other suitable solvent.

4. PROCEDURE

4.1 The specimen shall be free from mechanical damage. The diameter tape shall be applied directly over the bedding of the specimen in such a manner that the bedding is not distorted. The diameter over the bedding shall be read from the tape and the value recorded as D_1.

4.2 The bedding shall then be removed from the specimen and any saturants, fibers, or other extraneous material removed from the surface of the core (assembly under the bedding) by means of the cloth and solvent. The diameter over the core shall be measured in the same manner as described for diameter over the bedding and the value recorded as D_2.

4.3 The diameter over the bedding and over the core shall be determined as nearly as practicable at the same place.

5. RESULTS

5.1 Calculation. The thickness of the bedding at any place shall be calculated as follows:

$$\text{Thickness, inch} = \frac{D_1 - D_2}{2}$$

where:

D_1=the diameter over the bedding at the place measured, inches.

D_2=the diameter over the core at the place measured, inches.

5.2 Unless otherwise specified in the detail specification, two specimens, one from each end of the inspection unit, shall be tested.

5.3 The thickness of the bedding of the inspection unit shall be the average of the results obtained from the specimens tested.

5.4 The thickness of the bedding of the inspection unit shall be recorded to the nearest 0.01 inch.

Method 1211.1
18 April 2014

THICKNESS, METAL TAPE ARMOR

1. SCOPE

1.1 This method is intended for use in determining the thickness of flat metal tape or interlocking armor of insulated wire and cable.

2. SPECIMEN

2.1 The specimen should be the tape or armor removed from a piece of the inspection unit at least 3 inches in length. The tape or armor should be removed in such a manner as to change its shape as little as possible.

3. APPARATUS AND REAGENTS

3.1 The apparatus and reagents shall be as follows:

3.1.1 Micrometer caliper graduated to read in mils or 0.0001 inch and having a hemispherical anvil with a radius of curvature of 0.125 ± 0.005 inch and a flat-surface spindle of approximately 0.25 inch in diameter.

3.1.2 Wiping cloth.

3.1.3 Alcohol or other suitable solvent.

4. PROCEDURE

4.1 The specimen shall be free from mechanical damage. Any dirt, grease, saturants, or other extraneous materials shall be removed from the specimen by means of the cloth and solvent. In the case of interlocking armor the specimen shall also be free from jointed sections.

4.2 The micrometer caliper shall be applied directly to the specimen so that the anvil and spindle is just brought into contact with the surfaces of the specimen (anvil in contact with the inner circumference) in such a manner that the tape or armor is not distorted. The criterion of contact is the initial development of frictional resistance to movement of the tape or armor between the micrometer surfaces. The thickness of the armor or tape at the place measured shall be read from the micrometer caliper scale and the value recorded.

4.3 Five measurements equally spaced around the circumference of the specimen shall be made

5. RESULTS

5.1 Unless otherwise specified in the detail specification, two specimens, one from each end of the inspection unit, shall be tested.

5.2 The average thickness of the armor or tape of the inspection unit shall be the average of the results obtained from the specimens tested.

5.3 The minimum thickness of the armor or tape of the inspection unit shall be the smallest of all values averaged in determining the average thickness, 5.2.

5.4 The average thickness and minimum thickness of the armor or tape of the inspection unit shall be recorded to the nearest mil or 0.0001 inch.

Method 1221.1
18 April 2014

THICKNESS, WOVEN OR BRAIDED METAL ARMOR; MICROMETER CALIPER

1. SCOPE

1.1 This method is intended for use in determining the thickness of woven or braided metal armor. It is recommended for use when the wire or cable has an over-all diameter of less than one inch.

2. SPECIMEN

2.1 The specimen should be a piece of the inspection unit at least 2 feet in length.

3. APPARATUS AND REAGENTS

3.1 The apparatus and reagents shall be as follows:

3.1.1 Micrometer caliper graduated to read in mils or 0.0001 inch and having flat surfaces on both anvil and end of spindle each approximately 0.25 inch in diameter. The surfaces of the spindle and anvil shall be parallel to within 0.0001 inch.

3.1.2 Wiping cloth.

3.1.3 Alcohol or other suitable solvent.

4. PROCEDURE

4.1 The specimen shall be free from mechanical damage. Any dirt, grease, or other extraneous materials shall be removed from the specimen by means of the cloth and solvent. The micrometer caliper shall be applied directly over the armor so that the anvil and spindle are just brought into contact with the specimen in such a manner that the armor is not distorted. The criterion of contact is the initial development of frictional resistance to the movement of the specimen between the micrometer surfaces. The diameter over the armor shall be read from the micrometer scale and the value recorded as D_1.

4.2 The armor shall be removed from the specimen and the diameter over the core (assembly under the armor) determined and the value recorded as D_2. The micrometer caliper shall be applied directly over the core so that the specimen can just be moved between the anvil and spindle without distortion of the core.

4.3 Three measurements equally spaced along the length of the specimen shall be made. The diameter over the armor and over the core shall be determined as nearly as practicable at the same point.

5. RESULTS

5.1 Calculation. The thickness of the armor at any point shall be calculated as follows:

$$\text{Thickness, inch} = \frac{D_1 - D_2}{2}$$

where:
D_1=the diameter over the armor at the point measured, inches.

D_2=the diameter over the core at the point measured, inches.

5.2 Unless otherwise specified in the detail specification, two specimens, one from each end of the inspection unit, shall be tested.

5.3 The average thickness of the armor of the inspection unit shall be the average of the results obtained from the specimens tested.

5.4 The minimum thickness of the armor of the inspection unit shall be the smallest of all values averaged in determining the average thickness, 5.3.

5.5 The average thickness and minimum thickness of the armor of the inspection unit shall be recorded to the nearest mil or 0.0001 inch.

Method 1223.1
18 April 2014

THICKNESS, WOVEN OR BRAIDED METAL ARMOR; DIAMETER TAPE

1. SCOPE

1.1 This method is intended for use in determining the thickness of woven or braided metal armor. It is recommended for use when the wire or cable has an over-all diameter of 1 inch or more.

2. SPECIMEN

2.1 The specimen should be a piece of the inspection unit at least 2 feet in length.

3. APPARATUS AND REAGENTS

3.1 The apparatus and reagents shall be as follows:

3.1.1 Diameter tape graduated to read to at least 0.01 inch.

3.1.2 Wiping cloth.

3.1.3 Alcohol or other suitable solvent.

4. PROCEDURE

4.1 The specimen shall be free from mechanical damage. Any dirt, grease, or other extraneous materials shall be removed from the specimen by means of the cloth and solvent. The diameter tape shall be applied directly over the armor in such a manner that the armor is not distorted. The diameter over the armor shall be read from the tape and the value recorded as D_1.

4.2 The armor shall be removed from the specimen and the diameter over the core (assembly under the armor) determined in the same manner as described for over the armor and the value recorded as D_2.

4.3 Three measurements equally spaced along the length of the specimen shall be made. The diameters over the armor and over the core shall be determined as nearly as practicable at the same point.

5. RESULTS

5.1 Calculation. The thickness of the armor at any place shall be calculated as follows:

$$\text{Thickness, inch} = \frac{D_1 - D_2}{2}$$

Where:

D_1=the diameter over the armor at the place measured, inches.

D_2=the diameter over the core at the place measured, inches.

5.2 Unless otherwise specified in the detail specification, two specimens, one from each end of the inspection unit, shall be tested.

5.3 The average thickness of the armor of the inspection unit shall be the average of the results obtained from the specimens tested.

5.4 The minimum thickness of the armor of the inspection unit shall be the smallest of all values averaged in determining the average thickness, 5.3.

5.5 The average thickness and minimum thickness of the armor of the inspection unit shall be recorded to the nearest 0.01 inch.

Method 1311.1
18 April 2014

THICKNESS, LEAD SHEATH; MICROMETER CALIPER (ROUND ANVIL)

1. SCOPE

1.1 This method is intended for use in determining the thickness of lead and lead alloy sheath of insulated wire and cable whenever a section of the sheath for measuring can be removed from the wire or cable without distortion.

2. SPECIMEN

2.1 The specimen should be the sheath removed from a piece of the inspection unit at least 3 inches in length. The sheath should be removed in such a manner as to change its shape as little as possible.

3. APPARATUS AND REAGENTS

3.1 The apparatus and reagents shall be as follows:

3.1.1 Micrometer caliper graduated to read directly in mils or 0.0001 inch and having a hemispherical anvil with a radius of curvature of 0.125 ± 0.005 inch and a flat-surface spindle of approximately 0.25 inch in diameter.

3.1.2 Wiping cloth.

3.1.3 Alcohol or other suitable solvent.

4. PROCEDURE

4.1 The specimen shall be free from mechanical damage. Any dirt, grease, saturants, or other extraneous material shall be removed from the specimen by means of the cloth and solvent.

4.2 The micrometer caliper shall be applied directly to the specimen so that the anvil and spindle are just brought into contact with the surfaces of the specimen (anvil in contact with inner circumference) in such a manner that the sheath is not distorted. The criterion of contact is the initial development of frictional resistance to movement of the sheath between the micrometer surfaces.

4.3 The thickness of the sheath at the place measured shall be read from the micrometer caliper scale and the value recorded. Five measurements equally spaced around the circumference of the specimen shall be made.

5. RESULTS

5.1 Unless otherwise specified in the detail specification, two specimens, one from each end of the inspection unit, shall be tested.

5.2 The average thickness of the lead sheath of the inspection unit shall be the average of the results obtained from the specimens tested.

5.3 The minimum thickness of the lead sheath of the inspection unit shall be the smallest of all values averaged in determining the average thickness, 5.2.

5.4 The average thickness and minimum thickness of the lead sheath of the inspection unit shall be recorded to the nearest mil or 0.0001 inch.

Method 1313.1
18 April 2014

THICKNESS, LEAD SHEATH; MICROMETER CALIPER (FLAT ANVIL)

1. SCOPE

1.1 This method is intended for use in determining the thickness of lead and lead alloy sheath of insulated wire and cable whenever a section of the sheath for measuring cannot be removed from the wire or cable without distortion.

2. SPECIMEN

2.1 The specimen should be a piece of the inspection unit at least 2 feet in length from which any covering over the lead sheath has been removed.

3. APPARATUS AND REAGENTS

3.1 The apparatus and reagents shall be as follows:

3.1.1 Micrometer caliper graduated to read in mils or 0.0001 inch and having flat surfaces on both anvil and end of spindle, each approximately 0.25 inch diameter. The surfaces of anvil and spindle shall be parallel to within 0.0001 inch.

3.1.2 Wiping cloth.

3.1.3 Alcohol or other suitable solvent.

4. PROCEDURE

4.1 The specimen shall be free from mechanical damage. Any dirt, grease, saturants, or other extraneous material shall be removed from the specimen by means of the cloth and solvent. The micrometer caliper shall be applied directly over the lead sheath so that the anvil and the spindle are just brought into contact with the specimen in such a manner that the lead sheath is not distorted. The criterion of contact is the initial development of frictional resistance to movement of the specimen between the micrometer surfaces. The diameter over the sheath shall be read from the micrometer scale and the value recorded as D_1.

4.2 The lead sheath shall then be removed from the specimen and the diameter over the core (assembly under the lead sheath) determined and the value recorded as D_2. The micrometer caliper shall be applied directly over the core so that the specimen can just be moved between the anvil and spindle without distortion of the core.

4.3 Three sets of measurements equally spaced along the length of the specimen shall be made. Each set of measurements shall consist of the maximum and minimum diameter at the place measured. The diameter over the sheath and over the core shall be determined as nearly as practicable at the same point.

5. RESULTS

5.1 Calculation. The thickness of the sheath at any point shall be calculated as follows:

$$\text{Thickness, inch} = \frac{D_1 - D_2}{2}$$

where:

D_1=the diameter over the lead sheath at the point measured, inches.
D_2=the diameter over the core at the point measured, inches.

5.2 Unless otherwise specified in the detail specification, two specimens, one from each end of the inspection unit, shall be tested.

5.3 The average thickness of the lead sheath of the inspection unit shall be the average of the results obtained from the specimens tested.

5.4 The minimum thickness of the lead sheath of the inspection unit shall be the smallest of all values averaged in determining the average thickness, 5.3.

5.5 The average thickness and minimum thickness of the lead sheath of the inspection unit shall be recorded to the nearest mil or 0.0001 inch.

Method 1331.1
18 April 2014

THICKNESS, SHEATH

1. SCOPE

1.1 This method is intended for use in determining the thickness of rubber and plastic sheaths of insulated wire and cable.

2. SPECIMEN

2.1 The specimen should be a piece of the inspection unit at least 2 feet in length from which any covering over the sheath has been removed.

3. APPARATUS AND REAGENTS

3.1 The apparatus and reagents shall be as follows:

3.1.1 Micrometer caliper graduated to read in mils or 0.0001 inch and having flat surfaces on both the anvil and end of spindle, each approximately 0.25 inch in diameter. The surfaces of anvil and spindle shall be parallel to within 0.0001 inch.

3.1.2 Wiping cloth.

3.1.3 Alcohol or other suitable solvent.

4. PROCEDURE

4.1 The specimen shall be free from mechanical damage. Any dirt, grease, or other extraneous materials shall be removed from the specimen by means of the cloth and solvent. The micrometer caliper shall be applied directly over the sheath so that the specimen can just be moved between the anvil and spindle without distortion of the sheath. The diameter over the sheath shall be read from the micrometer scale and the value recorded as D_1.

4.2 The sheath shall then be removed from the specimen and the diameter over the core (assembly under the sheath) measured in the same manner as described for diameter over the sheath and the value recorded as D_2.

4.3 Three sets of measurements equally spaced along the length of the specimen shall be made. Each set of measurements shall consist of the maximum and minimum diameter at the place measured. The diameter over the sheath and over the core shall be determined as nearly as practicable at the same point.

5. RESULTS

5.1 Calculation. The thickness of the sheath at any point shall be calculated as follows:

$$\text{Thickness, inch} = \frac{D_1 - D_2}{2}$$

where:

D_1=the diameter over the sheath at the point measured, inches.

D_2=the diameter over the core at the point measured, inches.

5.2 Unless otherwise specified in the detail specification, two specimens from each inspection unit shall be tested.

5.3 The average thickness of the sheath of the inspection unit shall be the average of the results obtained from the specimens tested.

5.4 The minimum thickness of the sheath of the inspection unit shall be the smallest of all values averaged in determining the average thickness, 5.3.

5.5 The average thickness and minimum thickness of the sheath of the inspection unit shall be recorded to the nearest mil or 0.0001 inch.

Method 1411.1
18 April 2014

WIDTH, METAL TAPE ARMOR

1. SCOPE

1.1 This method is intended for use in determining the width of flat metal tape or interlocking armor of insulated wire and cable.

2. SPECIMEN

2.1 The specimen should be the tape or armor removed from a piece of the inspection unit at least 3 inches in length.

3. APPARATUS AND REAGENTS

3.1 The apparatus and reagents shall be as follows:

3.1.1 Vernier caliper graduated to 1/40 inch or less with a vernier to read to 1 mil or 0.0001 inch.

3.1.2 Wiping cloth.

3.1.3 Alcohol or other suitable solvent.

4. PROCEDURE

4.1 The specimen shall be free from mechanical damage. Any dirt, grease, saturants, or other extraneous materials shall be removed from the specimen by means of the cloth and solvent. The calipers shall be applied directly to the specimen so that the jaws of the calipers are just brought into contact with the specimen in such a manner that the tape or armor is not distorted. The criterion of contact is the initial development of frictional resistance to movement of the specimen between the caliper jaws. The width of the tape or armor shall be read from the caliper scale and the value recorded. Five measurements equally spaced along the length of the specimen shall be made.

4.2 Interlocking armor shall be removed from the finished wire or cable and flattened before the width measurements are made.

5. RESULTS

5.1 Unless otherwise specified in the detail specification, two specimens, one from each end of the inspection unit, shall be tested.

5.2 The average width of the tape or armor of the inspection unit shall be the average of the results obtained from the specimens tested.

5.3 The minimum width of the tape or armor of the inspection unit shall be the smallest of all values averaged in determining the average width, 5.2.

5.4 The maximum width of the armor of the inspection unit shall be the largest of all values averaged in determining the average width, 5.2.

5.5 The average, minimum, and maximum widths of flat armor of the inspection unit shall be recorded to the nearest mil or 0.0001 inch.

5.6 The average, minimum, and maximum widths of interlocking armor of the inspection unit shall be recorded to the nearest 10 mils or 0.01 inch.

Method 1421.1
18 April 2014

DIAMETER, ARMOR WIRE

1. SCOPE

1.1 This method is intended for use in determining of the wire used in the wire armor of insulated wire and cable.

2. SPECIMEN

2.1 The specimen should be a piece of the bare armor wire at least 1 inch in length taken from the inspection unit.

3. APPARATUS AND REAGENTS

3.1 The apparatus and reagents shall be as follows:

3.1.1 Micrometer caliper graduated to read in 0.1 mil or 0.0001 inch and having flat surfaces on both anvil and end of spindle, each approximately 0.25 inch in diameter. The surfaces of the anvil and spindle shall be parallel to within 0.0001 inch.

3.1.2 Wiping cloth.

3.1.3 Alcohol or other suitable solvent.

4. PROCEDURE

4.1 The specimen shall be free from mechanical damage. Any dirt, grease, or other extraneous materials shall be removed from the specimen by means of the cloth and solvent. The micrometer caliper shall be applied directly over the wire so that the anvil and spindle are just brought into contact with the specimen in such a manner that the wire is not distorted. The criterion of contact is the initial development of frictional resistance to movement of the specimen between the micrometer surfaces. The diameter of the wire shall be read from the micrometer caliper scale and the value recorded. Three measurements equally spaced along the length of the specimen shall be made.

4.2 The diameter measurements of the wire shall be made over any galvanizing or other metallic coating.

5. RESULTS

5.1 Unless otherwise specified in the detail specification, two specimens, one from each end of the inspection unit, shall be tested.

5.2 The average diameter of the armor wire of the inspection unit shall be the average of the results obtained from the specimens tested.

5.3 The minimum diameter of the armor wire of the inspection unit shall be the smallest of all values averaged in determining the average diameter, 5.2.

5.4 The average diameter and minimum diameter of the armor wire of the inspection unit shall be recorded to the nearest 0.1 mil or 0.0001 inch.

Method 1431.1
18 APRIL 2014

SIZE, CONDUCTOR

1. SCOPE

1.1 This method is intended for use in determining the size of solid and stranded conductors of insulated wire and cable. For the purpose of this method, the term “wire” should be defined as a slender rod or filament of drawn metal.

2. SPECIMEN

2.1 The specimen should be the bare conductors removed from a piece of the inspection unit at least 6 inches in length.

3. APPARATUS

3.1 The apparatus shall consist of a micrometer caliper graduated to read in 0.1 mil or 0.0001 inch and having flat surfaces on both anvil and end of spindle, each approximately 0.25 inch in diameter. The surfaces of anvil and spindle shall be parallel to within 0.0001 inch.

4. PROCEDURE

4.1 Solid conductors. The specimen shall be free from mechanical damage. The micrometer caliper shall be applied directly over the conductor so that the anvil and spindle are just brought into contact with the specimen in such a manner that the conductor is not distorted. The criterion of contact is the initial development of frictional resistance to movement of the specimen between the micrometer surfaces. The diameter of the conductor shall be read from the micrometer caliper scale and the values recorded. Two measurements of the diameter at positions approximately 90° apart on the specimen shall be made.

4.2 Stranded conductors. Individual wires of a stranded conductor cable shall be measured separately as described for solid conductors in 4.1. Unless otherwise specified in the detail specification, 10 percent of the wires and in no case less than seven wires shall be taken from the conductor for test. Wires shall be selected at random from each layer of the conductor and the number selected from each layer shall be proportional to the number of wires in the layer.

4.3 If tin or other metal coatings are present, the diameter measurements shall be made over the coating.

5. RESULTS

5.1 Calculation.

5.1.1 Solid conductor. The size of the conductor at any point, in circular mils, shall be calculated by squaring the diameter expressed in mils.

5.1.2 Stranded conductors. The size of the stranded conductor in circular mils shall be calculated as follows:

Size of wire, circular mil$=D_1^2+D_2^2+- - - - - - -+D_n^2$

where:

D_1=diameter (average of two measurements 90° apart) of first wire in the conductor, in mils

D_2=diameter (average of two measurements 90° apart) of second wire in the conductor, in mils

D_n=diameter (average of two measurements 90° apart) of nth wire in the conductor, in mils
n=the number of wires in the conductor

Size of stranded conductor, circular mils = $S_1+S_2+- - - - - - +S_n$

where:

S_1 = circular mil size of first wire in conductor (5.1.1)
S_2 = circular mil size of second wire (5.1.1)
S_n = circular mil size of Nth wire (5.1.1)
n = the number of wires in the conductor

5.2 Unless otherwise specified in the detail specification, two specimens from each inspection unit shall be tested.

5.3 The size of the conductor of the inspection unit shall be the average of the results obtained from the specimens tested.

5.4 The diameter of the conductor of the inspection unit shall be recorded to the nearest 0.1 mil or 0.0001 inch.

5.5 The cross-sectional area of the conductor of the inspection unit shall be recorded to the nearest circular mil.

Method 1441.1
18 APRIL 2014

CIRCUMFERENCE

1. SCOPE

1.1 This method is intended for use in determining the circumference of insulated wire or cable. It is applicable to the determination of the circumference of finished cable, insulated wires, bare wires, conductors, circumference over sheaths, etc., with a circumference of 3 inches or less, when the circumference is required or when it is desirable to calculate the diameter from the circumference.

2. SPECIMEN

2.1 The specimen should be a piece of the insulated wire, cable, conductor, etc., at least 12 inches in length taken from the inspection unit.

3. APPARATUS AND REAGENTS

3.1 The apparatus and reagents shall be as follows:

3.1.1 Fine wire or thread with a length approximately 10 times the nominal circumference of the specimen.

3.1.2 Convenient equipment for wrapping the wire or thread under a given tension around the specimen.

3.1.3 Convenient equipment for measuring the length of wire or thread which is wrapped around the specimen to an accuracy of 0.1 inch.

3.1.4 Satisfactory equipment for controlling the tension of the wire or thread during wrapping and for measuring the length of thread or wire in a given number of turns. Satisfactory equipment is shown on figure 1441.

3.1.5 The apparatus described in method 1018 for determining the diameter of the thread.

3.1.6 Wiping cloth.

3.1.7 Alcohol or other suitable solvent.

4. PROCEDURE

4.1 The specimen shall be free from mechanical damage. Any fiber, saturants, or other extraneous materials shall be removed from the specimen by means of the cloth and solvent. The specimen shall be placed in the testing apparatus and one end of the thread or wire attached to it by means of a chuck. The other end of the thread shall be placed over the pulley and attached to the 10-gram weight, which moves along a calibrated scale. The scale shall be calibrated so as to indicate the length of the thread wound around the specimen. At least 10 complete turns of the thread or wire shall be wrapped around the specimen under a load of 10 grams, and the number of turns recorded as *N*.

4.2 The wraps of thread shall be just in contact with each other, without any overlapping. The length of the N turns of thread shall be read from the scale and the value recorded as *L*.

4.3 The diameter of the small thread shall be measured with the microscope and the value recorded as D.

4.4 Unless otherwise specified in the detail specification, two measurements equally spaced along the length of the specimen shall be made.

5. RESULTS

5.1 Calculation

5.1.1 Circumference. The circumference of the wire, cable, or conductor, etc., at any place shall be calculated as follows:

$$\text{Circumference, inches} = \frac{L}{N} - \pi D$$

where:

L=the length of the thread for N turns at the place measured

N=the number of turns of the thread

D=the diameter of the thread, inch

5.1.2 Diameter – The diameter of the wire, cable, or conductor, etc., at any place shall be calculated by dividing the circumference by 3.1416.

5.2 Unless otherwise specified in the detail specification, three specimens from each inspection unit shall be tested.

5.3 The average circumference of the wire, cable, conductor, etc., of the inspection unit shall be the average of the results obtained from the specimens tested.

5.4 The minimum circumference of the wire, cable, conductor, etc., of the inspection unit shall be the smallest of all values averaged in determining the average circumference, 5.3.

5.5 The average and minimum circumference of the wire, cable, conductor, etc., of the inspection unit shall be recorded to the nearest 0.002 inch.

5.6 The average diameter and minimum diameter of the wire, cable, conductor, etc., of the inspection unit shall be recorded to the nearest 0.0001 inch.

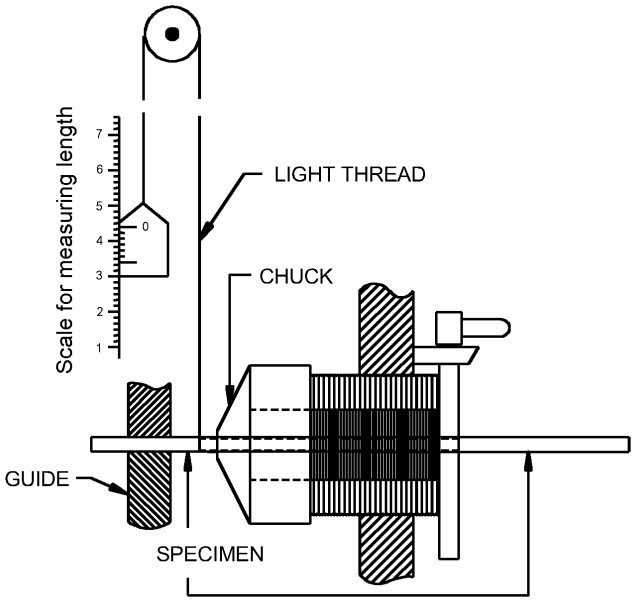

FIGURE 1441. Apparatus for measuring circumference.

Method 1511.1
18 APRIL 2014

LAY OF TWIST, ARMOR WIRE

1. SCOPE

1.1 This method is intended for use in determining the lay of twist (the ratio of the length of lay to the pitch diameter of the layer of armor wire) of armor wire. The pitch diameter of any layer of wire of a cable is the diameter of the circle passing through their centers.

2. SPECIMEN

2.1 The specimen should be a piece of the inspection unit of sufficient length to include at least two complete spirals of the armor wire from which any covering over the armor has been removed.

3. APPARATUS AND REAGENTS

3.1 The apparatus and reagents shall be as follows:

3.1.1 Steel scale graduated to 1/32 inch or finer or its decimal equivalent.

3.1.2 Binding cord or flexible wire.

3.1.3 Wiping cloth.

3.1.4 Alcohol or other suitable solvent.

4. PROCEDURE

4.1 The specimen shall be free from mechanical damage. Any dirt, fibers, saturants or other extraneous materials shall be removed from the specimen by means of the cloth and solvent. If necessary, the armor wires shall be secured in their original position by means of binding cord. The distance parallel to the axis of the specimen in which a helical element of the armor wire makes two complete spirals shall be measured to the nearest 1/32 inch with the steel scale and the value recorded as *2L*.

4.2 The diameter of the specimen over the armor shall be measured as described in method 1221 for diameter over the armor of the specimen and the value recorded as D_1.

4.3 The armor wire shall then be removed from the specimen and any fibers, saturants, or other extraneous materials removed from the wire by means of the cloth and solvent. The diameter of the armor wire shall be measured as described in method 1421 and the value recorded as D_2.

5. RESULTS

5.1 Calculation. The lay of twist of the armor wire at any place shall be calculated as follows:

$$\text{Lay of twist} = \frac{2L/2 \text{ (length of lay)}}{D_1\text{-}D_2 \text{ (pitch diameter)}}$$

where:

L=the distance parallel to the axis of the cable in which a helical element of the armor wire makes one complete spiral, inches

D_1=the diameter over the armor, inches

D_2=the diameter of the armor wire, inches

5.2 Unless otherwise specified in the detail specification, two specimens, one from each end of the inspection unit, shall be tested.

5.3 The lay of twist of the armor wire of the inspection unit shall be the average of the results obtained from the specimens tested.

5.4 The lay of twist of the armor wire of the inspection unit shall be recorded to the nearest whole number.

Method 1521.1
18 APRIL 2014

LAY OF TWIST, CABLE

1. SCOPE

1.1 This method is intended for use in determining the lay of twist (the ratio of the length of lay to the diameter of an individual finished conductor or to the pitch diameter of any layer of conductors of which the cable is composed) in terms of the diameter of the finished individual conductors or the pitch diameter. Pitch diameter of any layer of conductors of a cable is the diameter of the circle passing through their centers.

2. SPECIMEN

2.1 The specimen should be a piece of the inspection unit of sufficient length to include at least two complete spirals of the conductors from which any covering over the finished conductors has been removed.

3. APPARATUS AND REAGENTS

3.1 The apparatus and reagents shall be as follows:

3.1.1 Steel scale graduated to 1/32 inch or finer or its decimal equivalent.

3.1.2 Wiping cloth.

3.1.3 Alcohol or other suitable solvent.

4. PROCEDURE

4.1 Individual conductor method. The specimen shall be free from mechanical damage. Any fibers, saturants, or other materials shall be removed from the finished individual conductors by means of the cloth and solvent. The distance parallel to the axis of the cable in which the conductor makes one complete spiral shall be measured with the graduated scale to the nearest 1/32 inch and the value recorded as L. The diameter of the same individual conductor shall be determined as described in method 1431 and the value recorded as D.

4.2 Pitch diameter method (cable with five or more conductors).

4.2.1 The specimen shall be free from mechanical damage and shall be prepared as described in 4.1.

4.2.2 The distance parallel to the axis of the cable in which the conductors make one complete spiral shall be measured as described in 4.1 and the value recorded as L_1.

4.2.3 The diameter over any layer of conductors shall be measured as described in method 1431 for diameter over the conductor and the value recorded as D_1.

4.2.4 The conductors shall be separated and the diameter of a single finished conductor of the same layer measured as described for diameter over the layer and the value recorded as D_2.

5. RESULTS

5.1 Calculation.

5.2 The lay of twist of the cable at any place in terms of the diameter of finished individual conductors of which it is composed shall be calculated as follows:

$$\text{Lay of twist} = \frac{L \text{ (length of lay)}}{D \text{ (diameter of individual conductor)}}$$

where:

L=the distance, parallel to the axis of the cable, of one complete spiral of the conductor, inches.

D=the diameter over that same conductor, inches

5.2.2 The lay of twist of the cable at any place in terms of the pitch diameter of any layer of conductors of which it is composed shall be calculated as follows:

$$\text{Lay of twist} = \frac{L_2 \text{ (length of lay)}}{D_1\text{-}D_2 \text{ (pitch diameter)}}$$

where:

L_1=the distance, parallel to the axis of the cable, of one complete spiral of the conductor, inches

D_1=the diameter over the layer of conductors

D_2=the diameter over a conductor of the same layer

5.3 Unless otherwise specified in the detail specification, two specimens, one from each end of the inspection unit, shall be tested.

5.4 The lay of twist of the inspection unit shall be the average of the results obtained from the specimens tested.

5.5 The lay of twist of the inspection unit shall be recorded to the nearest whole number.

Method 1531.1
18 APRIL 2014

LENGTH OF LAY, WRAP OR SERVING

1. SCOPE

1.1 This method is intended for use in determining the length of lay or wraps servings, that is, the distance parallel to the axis of the conductor in which a serving or wrap makes one complete spiral.

2. SPECIMEN

2.1 The specimen should be a piece of the inspection unit at least 6 inches in length from which any covering over the wrap or serving has been removed.

3. APPARATUS AND REAGENTS

3.1 The apparatus and reagents shall be as follows:

3.1.1 Steel scale graduated to 1/32 inch or finer or its decimal equivalent.

3.1.2 Wiping cloth.

3.1.3 Alcohol or other suitable solvent.

4. PROCEDURE

4.1 The specimen shall be free from mechanical damage. The surface of the specimen shall be cleaned with the cloth and solvent so as to expose the individual yarns. The binder threads shall be cut or broken and a portion of the wrap or serving unwound for a distance of about one inch from the end of the specimen. A reference mark shall be placed on the surface of the core (assembly under the wrap or serving) to locate the edge of the serving at the point where unwinding stopped. Exactly four complete spirals of the serving shall be unwound and the distance along the axis of the cable from the reference mark to the edge of the serving measured to the nearest 1/32 inch and the value recorded as *4L*.

5. RESULTS

5.1 Calculation. The length of lay of the wrap or serving at any place shall be calculated as follows:

$$\text{Length of lay, inches} = \frac{4L}{4}$$

where:

4L=the distance in inches along the axis of the cable covered by four spirals of the wrap or serving

5.5 Unless otherwise specified in the detail specification, two specimens from each inspection unit shall be tested.

5.6 The length of lay of the wrap or serving of the inspection unit shall be the average of the results obtained from the specimens tested.

5.7 The length of lay of the wrap or serving of the inspection unit shall be recorded to the nearest 1/32 inch.

Method 1611.1
18 APRIL 2014

ANGLE, BRAID

1. SCOPE

1.1. This method is intended for use in determining the angle between the yarns of the braid and the axis of the insulated wire or cable.

2. SPECIMEN

2.1 The specimen should be a piece of the inspection unit at least 6 inches in length from which any covering over the braid has been removed.

3. APPARATUS AND REAGENTS

3.1 The apparatus and reagents shall be as described in the methods referenced in 4.

4. PROCEDURE

4.1 The specimen shall be free from mechanical damage. Any fiber, saturants, or other extraneous materials shall be removed from the surface of the specimen by means of the cloth and solvent. The number of picks per inch shall be determined as described in method 8011 and the value recorded as *P*.

4.2 The number of carriers shall be determined as described in method 8021 and the value recorded as *C*.

4.3 The thickness of the braid shall be determined as described in method 1111 and recorded as *T*.

4.4 The braid shall be removed from the specimen and the diameter over the core (assembly under the braid) determined as described in method 1111 and the value recorded as *D*.

4.5 If two braids are present, the angle of the outer one shall be determined from the diameter over the inner braid.

5. CALCULATION

5.1 The tangent of the angle of the braid at any place shall be calculated as follows:

$$\text{Tangent of angle} = \frac{2\pi P(D+T)}{C}$$

where:

P=the number of picks per inch of the braid

D=the diameter over the core, inch

T=the thickness of braid, inch

C=the number of carriers in the braid

$2\pi=6.28$

5.2 The angle of the braid shall be determined from the tangent of the angle by reference to a table of natural trigonometric functions.

5.3 Unless otherwise specified in the detail specification, two specimens, one from each end of the inspection unit, shall be tested.

5.4 The angle of the braid of the inspection unit shall be the average of the results obtained from the specimens tested.

5.5 The angle of the braid of the inspection unit shall be recorded to the nearest 5°.

Method 1621.1
18 APRIL 2014

ANGLE, WRAP

1. SCOPE

1.1 This method is intended for use in determining the angle which the yarns of cotton wrap make with the axis of the insulated wire or cable.

2. SPECIMEN

2.1 The specimen should be a piece of the inspection unit at least 6 inches in length from which any covering over the wrap has been removed.

3. APPARATUS AND REAGENTS

3.1 The apparatus and reagents shall be as described in the methods referenced in 4.

4. PROCEDURE

4.1 The specimen shall be free from mechanical damage. The length of lay shall be determined as described in method 1531 and the value recorded as *L*.

4.2 The diameter over the wrap shall be determined as described in method 1141 and the value recorded as *D*.

4.3 The wrap shall then be removed from the specimen and the diameter over the core (assembly under the wrap) shall be determined as described in method 1141, and the value recorded as D_1.

4.4 If two wraps are present, the angle of the outer wrap shall be determined from the diameter over the inner wrap.

5. RESULTS

5.1 Calculation. The tangent of the angle of the wrap at any place shall be calculated as follows:

$$\text{Tangent of angle} = \frac{\pi(D+D_1)}{2L}$$

where:

D=the diameter over the wrap or serving, inch

D_1=the diameter over the core, inch

L=the length of lay of one spiral of wrap

π=3.14

5.2 The angle of the wrap shall be determined from the tangent of the angle by reference to a table of natural trigonometric functions.

5.3 Unless otherwise specified in the detail specification, two specimens, one from each end of the inspection unit, shall be tested.

5.4 The angle of the wrap of the inspection unit shall be the average of the results obtained from the specimens tested.

5.5 The angle of the wrap of the inspection unit shall be recorded to the nearest 5°.

Method 1631.1
18 APRIL 2014

ANGLE OF BRAID, METAL ARMOR

1. SCOPE

1.1 This method is intended for use in determining the angle between the wire of braided metal armor and the axis of the insulated wire or cable.

2. SPECIMEN

2.1 The specimen should be a piece of the inspection unit at least 12 inches in length from which any covering over the armor has been removed.

3. APPARATUS AND REAGENTS

3.1 The apparatus and reagents shall be as described in the methods referenced in 4.

4. PROCEDURE

4.1 The specimen shall be free from mechanical damage. The number of picks per inch of the armor shall be determined as described in method 8011 and the value recorded as *P*.

4.2 The number of carriers in the armor shall be determined as described in method 8021 and the value recorded as C.

4.3 The armor shall be removed from the specimen and the diameter over the core (assembly under the armor) shall be determined as described in method 1111 and the value recorded as D.

4.4 The thickness of the armor shall be determined as described in method 1221 and the value recorded as T.

5. RESULTS

5.1 Calculation. The tangent of the angle of the metal armor at any place shall be calculated as follows:

$$\text{Tangent of angle} = 2\pi P(D+T)/C$$

where:

P=the number of picks per inch

D=the diameter over the core, inches

T=the thickness of the armor, inch

C=the number of carriers in the armor

$2\pi=6.28$

5.2 The angle of the metal armor shall be determined from the tangent of the angle by reference to a table of natural trigonometric functions.

5.3 Unless otherwise specified in the detail specification, two specimens, one from each end of the inspection unit, shall be tested.

5.4 The angle of the braided metal armor of the inspection unit shall be the average of the results obtained from the specimens tested.

5.5 The angle of the braided metal armor of the inspection unit shall be recorded to the nearest 5°.

Method 1711.1
18 APRIL 2014

OVERLAP, COTTON TAPE

1. SCOPE

1.1 This method is intended for use in determining the overlap of woven cotton tape on insulated wire and cable.

2. SPECIMEN

2.1 The specimen should be a piece of the inspection unit sufficient to contain at least six complete spirals of the tape from which any covering over the tape has been removed.

3. APPARATUS AND REAGENTS

3.1 The apparatus and reagents shall be as follows:

3.1.1 Steel scale graduated to 1/32 inch or finer, or its decimal equivalent.

3.1.2 Wiping cloth.

3.1.3 Alcohol or other suitable solvent.

4. PROCEDURE

4.1 The specimen shall be free from mechanical damage. Any saturants or other extraneous materials shall be removed from the surface of the specimen by means of the cloth and solvent so as to expose the laps of the tape. The specimen shall then be laid on a smooth horizontal surface and the distance along the axis covered by 4 laps of the tape measured to the nearest 1/32 inch and the value recorded as *4L*.

4.2 The tape shall be removed from the specimen. The tape shall be straightened; the width measured by means of the steel scale at three places equally spaced along the length of the tape and the average value recorded as *W*.

4.3 If two or more layers of tape are present, the overlap of each layer shall be determined separately.

5. RESULTS

5.1 Calculation. The overlap of the cotton tape at any place shall be calculated as follows:

$$\text{Overlap, inch} = \frac{W-4L}{4}$$

where:

W=the width of the tape, inches

4L=the length along the axis of the wire or cable covered by 4 laps of the tape, inches

5.2 Unless otherwise specified in the detail specification, two specimens, one from each end of the inspection unit, shall be tested.

5.3 The overlap of the tape of the inspection unit shall be the average of the results obtained from the specimens tested.

5.4 The overlap of the tape of the inspection unit shall be recorded to the nearest 1/32 inch.

Section 2000

MECHANICAL TESTS

Method 2011.1
18 APRIL 2014

FLEXIBILITY, INSULATION, LOW TEMPERATURE

1. SCOPE

1.1 This method is intended for use in determining the resistance of insulating and jacketing compounds to cracking when bent at low temperatures.

2. SPECIMEN

2.1 This specimen should be a piece of the inspection unit of sufficient length for testing, as described in 4.2. When testing the insulation, all outer coverings should be removed.

3. APPARATUS

3.1 The apparatus shall be as follows:

3.1.1 Mandrels shall be of a standard size in one of the following diameters:

1/16	(0.0625)	1 21/32	(1.6562)
3/32	(0.0938)	1 15/16	(1.9375)
1/8	(0.1250)	2 3/8	(2.3750)
3/16	(0.1875)	2 7/8	(2.8750)
1/4	(0.2500)	3 1/2	(3.5000)
3/8	(0.3750)	4	(4.0000)
1/2	(0.5000)	4 1/2	(4.5000)
11/16	(0.6875)	5	(5.0000)
27/32	(0.8438)	7 1/2	(7.5000)
1 1/16	(1.0625)	11	(11.0000)
1 5/16	(1.3125)		

The standard size selected shall be the largest size which does not exceed the value computed in accordance with table I. The 0.0625-inch mandrel shall be used when a smaller size than 0.0625 is indicated by the computation.

3.1.2 Cold chamber, such as a refrigerator or other equipment, capable of maintaining the mandrel and specimen at the required temperature ± 1°C. (2°F).

4. PROCEDURE

4.1 The specimen shall be subjected to a temperature as specified in the detail specification or specification sheet for a period of 20 hours ± 1/4 hour, except when otherwise specified in the detail specification or specification sheet.

4.2 The specimen shall be suspended vertically with lower end weighted sufficiently to keep specimen taut and to permit bending without handling. The specimen shall be attached to the mandrel of the size computed in accordance with table I. The specimen and mandrel shall be placed in the cold chamber and subjected to the required temperature for the required period of time. At the end of the exposure period and while still in the cold chamber, the specimen shall be bent for six close turns around the mandrel for cable outside diameter of 0.750 inch or less, or 180° bend for cable outside diameter of 0.751 inch or greater, at the rate specified in the detail specification or specification sheet. The specimen shall be examined for cracks.

4.3 Flat twin wire or cable shall be bent on the minor axis of its cross section.

TABLE I. Computed mandrel sizes

Nom. outside diameter of insulated conductor of cable	Mandrel size, maximum		
	Unshielded cable	Shielded cable	Individual insulated conductors
Up to 0.300	1.0 X OD	3.0 X OD	1.5 X OD
.301 to .350	2.0 X OD	3.0 X OD	2.0 X OD
.351 to .450	2.5 X OD	3.0 X OD	2.5 X OD
.451 to .550	3.0 X OD	3.0 X OD	3.0 X OD
.551 to .750	4.0 X OD	4.0 X OD	
.751 to .950	5.0 X OD	5.0 X OD	
.951 to 1.050	6.0 X OD	6.0 X OD	
1.051 to 1.150	7.0 X OD	7.0 X OD	
1.151 to 1.250	8.0 X OD	8.0 X OD	
Over 1.251	10.0 X OD	10.0 X OD	

5. RESULTS

5.1 Unless otherwise specified in the detail specification or specification sheet, one specimen from each inspection unit shall be tested.

5.2 Any cracks in the insulation or jacket of the specimen shall be recorded.

5.3 The flexibility of the insulation or jacket of the inspection unit shall be the results obtained from the specimen or specimens tested.

5.4 The temperature and time of exposure.

Method 2021.1
18 APRIL 2014

FLEXIBILITY, ARMORED CABLE, LOW TEMPERATURE

1. SCOPE

1.1 This method is intended for use in determining the ability of armored cable to withstand bending at a low temperature without damage.

2. SPECIMEN

2.1 The specimen should be a piece of the inspection unit of sufficient length to permit bending one complete turn around the mandrel required in 4.2.

3. APPARATUS

3.1 The apparatus shall be as follows:

3.1.1 Mandrel of the diameter required in 4.2.

3.1.2 Wooden bar approximately 5 feet in length.

3.1.3 Cold chamber as a refrigerator or other equipment capable of maintaining the mandrel and mounted specimen at the required temperature within ± 1°C. (2°F).

4. PROCEDURE

4.1 Unless otherwise specified in the detail specification, the specimen shall be subjected to a temperature of -10°C ± 1°C. (14° ± 2°F) for a period of 18 ± ¼ hour.

4.2 Unless otherwise specified in the detail specification, the size of the mandrel shall be 6.5 times the over-all diameter of the specimen.

4.3 The specimen shall be free from mechanical damage and shall not be bent or flexed until it has reached room temperature. It shall be straightened and mounted on a wooden bar. The mounted specimen and mandrel shall be placed in the cold chamber at the required temperature for the required period of time. At the end of the exposure period, the specimen shall be removed from the cold chamber, detached from the bar, and immediately bent around the mandrel at a uniform rate of 20° per second. The specimen shall be clamped in the bent position and a visual inspection made of all its component parts. The armor shall be opened and the material under it examined for cracking or other damage.

4.4 Flat twin wire or cable shall be bent on the minor axis of its cross section only. The minor diameter shall be used in determining the size of the mandrel.

5. RESULTS

5.1 Unless otherwise specified in the detail specification, one specimen from each inspection unit shall be tested.

5.2 Any cracking or other damage to the armor of other parts of the specimen shall be recorded.

5.3 The flexibility of the inspection unit shall be the results obtained from the specimen or specimens tested.

5.4 The temperature, time of exposure, and size of the mandrel shall be recorded.

Method 2031.1
18 APRIL 2014

FLEXIBILITY, COTTON COVERED ELECTRIC CORD

1. SCOPE

1.1 This method is intended for use in determining the ability of insulated wire, cord, and cable to bend around cylindrical forms of relatively small diameter without damage. It is particularly applicable to cotton covered flexible electric cord. The method is not applicable to asbestos covered cord or wire.

2. SPECIMEN

2.1 The specimen should be a piece of the inspection unit at least 15 feet in length.

3. APPARATUS

3.1 The apparatus shall consist of a mandrel of the diameter required in 4.1.

4. PROCEDURE

4.1 Unless otherwise specified in the detail specification, the diameter of the mandrel shall be five times the over-all diameter of the specimen.

4.2 Unless otherwise specified in the detail specification, the specimen shall be conditioned and tested at a temperature of 23° ± 1°C. (73.5° ± 2°F).

4.3 The specimen shall be free from mechanical damage and shall not be bent or flexed until it has reached the temperature required in 4.2. Handling and flexing of the specimen shall be reduced to the absolute minimum necessary in conducting the test. The over-all diameter of the specimen shall be measured as described in method 1111. The specimen shall be bent for ten close turns around the mandrel required in 4.1. It shall then be unwound and rewound so that the outer side of the coil is reversed to become the inner side. This operation shall be repeated for a total of three cycles. The coil shall then be straightened and examined visually for breaks in the fibrous covering or conductor, flaking of any impregnating compounds or finishing materials, damage to the insulation, or change in appearance or evidence of strain. Cracking is not necessarily flaking of the finish.

4.4 Flat twin cable shall be bent on the minor axis of its cross section only. The minor diameter shall be used in determining the size of the mandrel.

5. RESULTS

5.1 Unless otherwise specified in the detail specification, one specimen from each inspection unit shall be tested.

5.2 Any breaking of the fibrous covering or conductors, damage to the insulation, appreciable change in appearance, or evidence of strain of the specimen shall be recorded.

5.3 Flaking of the finished materials of the specimen shall be recorded.

5.4 The flexibility of the inspection unit shall be the results obtained from the specimen tested.

5.5 The temperature of the test and size of the mandrel shall be recorded.

Method 2041.1
18 APRIL 2014

FLEXIBILITY, FIBROUS COVERINGS

1. SCOPE

1.1 This method is intended for use in determining the resistance to breakage of the yarns of fibrous coverings of insulated wire and cable. It is particularly applicable to wires and cables of the building type.

2. SPECIMEN

2.1 The specimen should be a piece of the inspection unit 24 ± ½ inch in length.

3. APPARATUS

3.1 The apparatus shall consist of a mandrel of the diameter required in table I of method 8221.

4. PROCEDURE

4.1 Unless otherwise specified in the detail specification, the specimen shall be conditioned and tested at a temperature of 23° ± 1°C. (73.5° ± 2°F).

4.2 The specimen shall be free from mechanical damage and shall not be bent or flexed until it has reached the temperature specified in 4.1. Handling and flexing of the specimen shall be reduced to the absolute minimum necessary in conducting the test. The specimen shall then be bent around a mandrel of the diameter required in table I of method 8221. If the wire or cable is size No. 2 AWG or smaller, as many turns shall be made about the mandrel as will permit it to conform closely to the mandrel with a 2 to 21/2 inch straight length of the specimen at each end. If the size of the wire or cable is larger than No. 2 AWG, a simple U-turn shall be made about the mandrel. The specimen shall be examined for broken yarns in the fibrous covering both before and after removal from the mandrel. Examination shall also be made for any flaking of the finishing material from the wire or cable as a result of the bending test, without actual rubbing of the wire. Cracking is not necessarily flaking of the finish.

4.3 Flat twin cable shall be bent on the minor axis of its cross section only.

5. RESULTS

5.1 Unless otherwise specified in the detail specification, one specimen from each inspection unit shall be tested.

5.2 Any breaking of the yarns in the fibrous covering of the specimen shall be recorded.

5.2.1 For wraps or servings, the type of yarn broken shall be recorded.

5.3 Any flaking of the finishing materials of the specimen shall be recorded.

5.4 The flexibility of the fibrous covering of the inspection unit shall be the results obtained from the specimen or specimens tested.

5.5 The temperature of the test shall be recorded.

Method 2043.1
18 APRIL 2014

FLEXIBILITY, FIBROUS COVERINGS, LOW TEMPERATURE

1. SCOPE

1.1 This method is intended for use in determining the effect of bending at low temperatures on fibrous coverings of wire and cable.

2. SPECIMEN

2.1 The specimen, from a single insulated conductor 0.500 inch in diameter and smaller, should be a piece of the inspection unit of sufficient length to permit bending three complete turns around a mandrel of the diameter specified in table I. The specimen from a single insulated conductor larger than 0.500 inch in diameter and any multiple conductor cable, should be a piece of the inspection unit of sufficient length to permit bending one complete turn around a mandrel of the diameter specified in table I. Any covering over the fibrous covering to be tested should be removed.

3. APPARATUS

3.1 The apparatus shall be as follows:

3.1.1 Mandrel with a diameter equal to the over-all cable diameter multiplied by the factor specified in table I.

3.1.2 Cold chamber as a refrigerator or other equipment capable of maintaining the specimen at the required temperature within ± 1°C (2°F).

TABLE I. Multiplying factor for determining mandrel diameter

Cable diameter	0 to 0.5 inch	0.501 to 1.000 inch		1.001 to 1.500 inches		Over 1.500 inches
Conductor size, AWG (inch)	Any size	Up to 4/0	4/0 and over	Up to 4/0	4/0 and over	Any size
Insulation thickness:						
10/64 and smaller	3	4	6	6	8	12
Over 10/64 to 20/64	4	5	7	7	10	12
Over 20/64		6	8	8	12	12

4. PROCEDURE

4.1 Unless otherwise specified in the detail specification, the specimen shall be subjected to a temperature of -10° ± 1°C. (14° ± 2°F) for a period of 5 ± ¼ hour.

4.2 The specimen shall be free from mechanical damage and shall not be bent or flexed until it has reached room temperature. It shall then be straightened and placed in the cold chamber for the required time at the required temperature. At the end of the exposure period, the specimen shall be removed from the cold chamber and bent immediately around a mandrel of the required size at a uniform rate of not less than 10 nor more than 12 turns per minute. The specimen shall be clamped in the bent position and inspected visually for breaking of the yarn in the fibrous covering and flaking of the finishing material from the cable. Cracking is not necessarily flaking of the finish.

4.3 The diameter of the mandrel shall be determined by multiplying the overall diameter of the cable by the factor in table I corresponding to the overall diameter of the cable and the average thickness of the insulation shall be determined as described in method 1011.

4.4 Flat twin cable shall be bent on the minor axis of its cross section only. The minor diameter shall be used in determining the size of the mandrel.

5. RESULTS

5.1 Unless otherwise specified in the detail specification, one specimen from each inspection unit shall be tested.

5.2 Any breaking of the yarn in the fibrous covering of the specimen shall be recorded.

5.2.1 For wraps or servings, the type of yarn broken shall be recorded.

5.3 Any flaking of the finishing materials of the specimen shall be recorded.

5.4 The flexibility of the inspection unit shall be the results obtained from the specimen or specimens tested.

5.5 The temperature, time of exposure, and size of mandrel shall be recorded.

Method 2051.1
18 APRIL 2014

FLEXIBILITY, EXTENSILE AND RETRACTILE CORD

1. SCOPE

1.1 This method is intended for use in determining the characteristics of retractile cord.

2. SPECIMEN

2.1 The specimen should consist of a 6-inch length of finished retractile cord.

3. APPARATUS

3.1 The apparatus shall be as follows:

3.1.1 A suitable testing machine that will extend and retract the cord at a fixed rate.

3.1.2 Weights of 6, 8, and 10 ounces.

3.1.3 Cold chamber, such as a refrigerator or other equipment, capable of maintaining the required temperature within ± 1°C (2°F).

4. PROCEDURE

4.1 Prior to meeting any extensile and retractile tests, the cord shall first be conditioned by extending the coiled portion 6 to 5 times its retracted length, allowing it to retract freely each time. The cord shall be capable of returning to its original continguous position when laid on a horizontal surface.

4.2 The resistance of the conductor shall be measured and recorded in accordance with method 6021. The cord shall then be clamped in a suitable testing machine and extended to 4 times its retracted length for 5,000 cycles at a rate of not less than 18 nor more than 40 cycles per minute. The cord shall be capable of returning to at least 20 percent of its original retracted length within one hour after completion of the cycling. The resistance of the conductor shall be remeasured and the change in the resistance shall not exceed 10 percent of its original resistance.

4.3 The cord shall then be positioned vertically and a load of 6 ounces for single-conductor cord, 8 ounces for two-conductor core, and 10 ounces for three- or four-conductor cord shall be applied to the end. The finished cord shall have a minimum extended length of 2-1/2 times its retracted length.

4.4 The cord shall then be suspended vertically and extended to 5 times its retracted length and immediately released. The cord shall return to within 10 percent of its original length within 5 minutes.

4.5 The cord shall then be extended between two adjustable clamps fastened to a vertical support so that the coiled portion of the cord is stretched to 250 percent of its original retracted length for a period of 48 hours. After 48 hours, the cord shall be released from its extended position and freed from restraint by tapping on a horizontal surface and laid at rest. Thirty minutes after being placed at rest on the horizontal surface, the cord shall return to not more than 115 percent of its original retracted length within 30 minutes.

4.6 The finished cord shall be placed in a cold chamber for not less than 20 hours at a temperature of -40° ± 1°. At the end of this period and without removing from the chamber, the cord shall be extended to 4 times its retracted length and then released on a horizontal surface. While still at -40°C temperature, the cable shall be freed from restraint by tapping on the surface. The cord shall retract to not more than 200 percent of its original length within 30 seconds.

5. RESULTS

5.1 Unless otherwise specified in the detail specification or specification sheet, one specimen from each inspection unit shall be tested.

5.2 The direct current resistance, both before and after the cycling, shall be recorded.

5.3 The temperature and time of exposure that the cord withstood in the cold chamber shall be recorded.

Method 2061.1
18 APRIL 2014

CRUSH RESISTANCE

1. SCOPE

1.1 This method is intended for use in determining the effect of crush resistance on wire and cable.

2. SPECIMEN

2.1 Two 18 inch specimens of the completed wire or cable shall be used for this test.

3. APPARATUS

3.1 The apparatus shall be as follows.

3.2 Shock test apparatus (see figure 1).

4. PROCEDURE

4.1 The specimens shall be freely suspended in an air oven at a temperature of +71° C ± 1°C for a period of 72 hours. At the expiration of the 72 hour period, the specimens shall be removed from the oven and allowed to remain at room temperature for 24 hours, after which they shall be subjected to the following test.

4.1.1 The shock shall consist of dropping a 23±1 pound weight and free fall distance of 6.5±0.50 inch, minus the outside diameter of the test sample on the center portion of the sample while it is clamped flat on a smooth steel plate, free of abrasive contaminants as shown on figure 1. The drops shall be made at the rate of 25±2 per minute. There shall be a continuous current of 100 milliamperes supplied to the conductors under test with a current monitoring device to detect interior short circuit or failure with 1/3 or ½ of the conductors of a multi-conductor cable shall be permanently connected in serried with the adjacent conductors connected into the load circuit.

5. RESULTS

5.1 Unless otherwise specified in the detail specification, two 18 inch specimens of the completed wire or cable shall be tested, one from each end of the inspection unit.

5.2 Any cracks, tears or distortions in the insulation on the internal and external surfaces shall be recorded.

5.3 Discontinuities in current flow, short outs shall be recorded. Failure of a sample will be considered as the time when current ceases to flow or when the specimen shorts out of grounds.

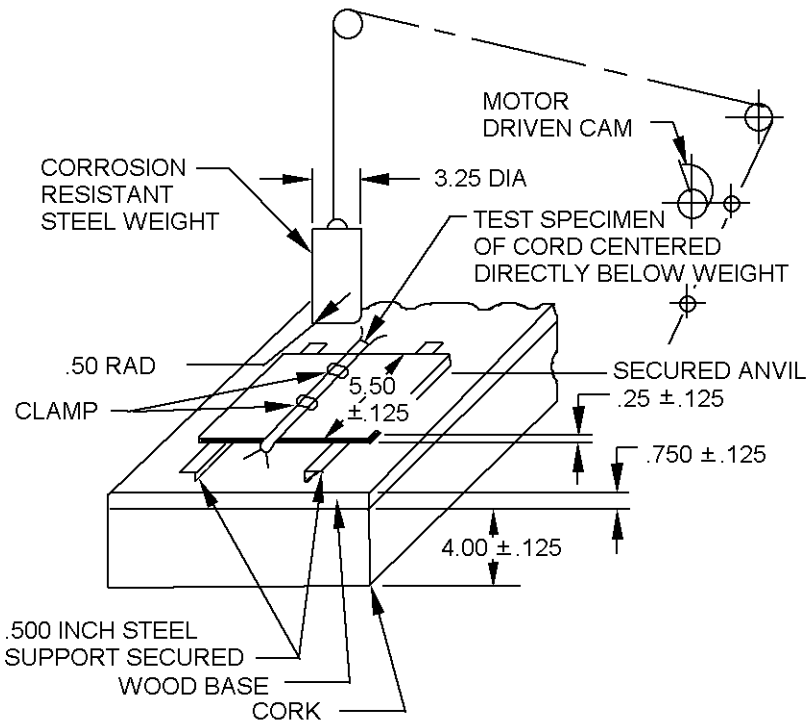

Inches	mm
.016	0.41
.125	3.18
.25	6.35
.50	12.7
.750	19.05
3.25	82.55
4.00	101.60
5.50	139.7

NOTES:
1. Dimensions are in inches.
2. Metric equivalents are given for information only.
3. Unless otherwise specified, tolerances are ±.016 (0.41mm).

FIGURE 1. Shock test apparatus.

Method 2111.1
18 APRIL 2014

ELONGATION, ARMOR

1. SCOPE

1.1 This method is intended for use in determining the resistance to stretching of armor on insulated wire and cable.

2. SPECIMEN

2.1 The specimen should be a piece of the inspection unit at least 44 inches in length from which any covering over the armor has been removed.

3. APPARATUS

3.1 The apparatus shall be as follows:

3.1.1 Two clamps each 2 inches wide and of good fit on the cable to be tested.

3.1.2 Weight as required in 4.1.

3.1.3 Vertical hoisting equipment.

3.1.4 Steel scale or tape graduated to 1/32 inch or finer, or its decimal equivalent.

4. PROCEDURE

4.1 Unless otherwise specified in the detail specification, a weight of 100 pounds shall be used.

4.2 One clamp shall be fastened on each end of the specimen, leaving 2 inches of the cable projected beyond the clamps. This leaves a distance of 36 inches of the specimen between the clamps. The clamps shall be fastened firmly enough to prevent slipping but not tight enough to crush the armor.

4.3 One clamp shall be connected to the weight and the other attached to a hoisting apparatus. The unweighted end of the specimen shall be hoisted gently until the weight on the other end hangs freely without swaying. The specimen shall hang vertically and perpendicularly to the face of the clamps. The specimen shall support the specified weight for one minute. The specimen and weight shall be lowered, the clamps removed, and the specimen measured for recession of the conductors into the armor at each end. The measurements shall be made to the nearest 1/32 inch and the sum of the recessions recorded.

5. RESULTS

5.1 Unless otherwise specified in the detail specification, one specimen from each inspection unit shall be tested.

5.2 The elongation of the armor at any place shall be the sum of the recessions of the conductor into the armor at each end.

5.3 The elongation of the armor of the inspection unit shall be the result obtained from the specimen tested.

5.3.1 When more than one specimen is tested, the elongation of the armor of the inspection unit shall be the average of the results obtained from the specimens tested.

5.4 The elongation of the armor of the inspection unit shall be recorded to the nearest 1/32 inch.

5.5 The weight used shall be recorded.

Method 2131.1
18 APRIL 2014

TOUGHNESS, ARMOR WIRE

1. SCOPE

1.1 This method is intended for use in determining the ability of armor wire to resist breaking from repeated flexing.

2. SPECIMEN

2.1 The specimen should be a 6-inch length of the wire taken from the armor of the inspection unit.

3. APPARATUS

3.1 The apparatus shall be as follows:

3.1.1 Flexing machine with a power driven oscillating head and equipment for holding the specimen under constant tension.

3.1.1.1 Two supports each with a radius of curvature of 0.030 inch shall be mounted on the head. With the head at its mid-point of travel, the pins shall be in the horizontal plane through the center of the head and normal to the plane of oscillation. The position of the pins shall be adjustable to accommodate wire of various diameters and the pins shall be spaced equidistant from the center of oscillation. With a specimen in the machine, the head shall oscillate through an angle of 180° and bend the specimen, while under tension, back and forth over the pins. The head shall oscillate at a uniform speed of 25 cycles per minute (50 oscillations per minute).

3.1.1.2 The machine shall be equipped with a counter to indicate the number of oscillations.

4. PROCEDURE

4.1 The constant tension applied to the specimen shall be as specified in the detail specification.

4.2 The specimen shall be free from mechanical damage, shall show no surface cracks or other defects visible to the unaided eye, and shall be free from surface oxide. The specimen shall be placed in the testing machine under the required tension and the machine started. The test shall continue with frequent observations until the wire has broken. At this point the number of oscillations required to break the specimen shall be read from the counter and the value recorded.

5. RESULTS

5.1 Unless otherwise specified in the detail specification, three specimens from each inspection unit shall be tested.

5.2 The toughness of the armor wire of the inspection unit shall be the average of the results obtained from the specimens tested.

5.3 The toughness of the armor wire of the inspection unit shall be recorded to the nearest cycle.

5.4 The tension applied to the specimen shall be recorded.

Method 2161.1
18 APRIL 2014

SPRINGINESS, ARMOR WIRE

1. SCOPE

1.1 This method is intended for use in determining the ability of a braided metal armor to remain tight on the sheath or core material during and after fabrication of the cable.

2. SPECIMEN

2.1 The specimen should be a 2-foot length of the wire taken from the armor of the inspection unit. An equivalent length taken from the wire before braiding may be used when specified in the detail specification.

3. APPARATUS

3.1 The apparatus shall be as follows:

3.1.1 Steel mandrel 0.25 ± 0.01 inch in diameter.

3.1.2 Weight as required in 4.1.

3.1.3 Any suitable machine for holding and turning the mandrel about its own axis. A satisfactory device is a power-driven lathe equipped with chuck.

3.1.4 Binding wire or cord.

3.1.5 Micrometer caliper graduated to read to mils or 0.0001 inch, and having flat surfaces on both anvil and end of spindle, each approximately 0.25 inch in diameter. The surfaces of the anvil and spindle shall be parallel to within 0.0001 inch.

4. PROCEDURE

4.1 Unless otherwise specified in the detail specification, a weight of 100 grams shall be used.

4.2 The mandrel shall be centered in the chuck of the lathe and supported at the free end on a center. The specimen shall be bent around the mandrel and fastened by means of a binding core or wire. The required weight shall be applied to the free end of the specimen and the chuck turned at approximately 20 revolutions per minute to wind the specimen on the mandrel. Adjacent turns of the wire shall be kept as close to each other as practicable.

4.3 After the specimen has been wound around the mandrel, the diameter over the armor wire coil shall be measured and the value recorded as D_1. The anvil and spindle of the micrometer caliper shall be just brought into contact with the surface of the armor wire in such a manner that it is not distorted. The criterion of contact is the initial development of frictional resistance to movement of the armor wire between the micrometer surfaces. The weight shall be detached and the armor wire coil removed from the mandrel. The diameter over the coil shall be measured as described above and the value recorded as D_2. Five measurements near the middle of the coil shall be made and the average recorded as D_1 and D_2 respectively. The diameter over the coil before and after removal from the mandrel shall be determined as nearly as practicable at the same point.

5.1 Calculation. The springiness of the armor wire of the specimen shall be calculated as follows:

$$\text{Springiness, inches} = D_2 - D_1$$

where:

D_1=the average diameter over the armor wire coil wound around the mandrel, inches

D_2=the average diameter over the armor wire coil after removal from the mandrel, inches

5.2 Unless otherwise specified in the detail specification, two specimens from each inspection unit shall be tested.

5.3 The springiness of the armor wire of the inspection unit shall be the average of the results obtained from the specimens tested.

5.4 The springiness of armor wire of the inspection unit shall be recorded to the nearest mil or 0.001 inch.

5.5 The weight used shall be recorded.

Method 2171.1
18 APRIL 2014

TIGHTNESS, ARMOR

1. SCOPE

1.1 This method is intended for use in determining the tightness of braided armor on the conductor assembly.

2. SPECIMEN

2.1 The specimen should be a piece of the inspection unit 10 ½ feet in length from which any covering over the armor has been removed.

3. APPARATUS

3.1 The apparatus shall be as follows:

3.1.1 Pipe approximately 10 feet long and having an inside diameter slightly larger than the outside diameter slightly larger than the outside diameter of the specimen to be tested so as to permit the cable to move freely by not loosely through the pipe. One end of the pipe exterior shall be threaded to receive a cap which shall contain a round, smooth hole large enough to allow the cable conductors to pass freely, but small enough that a flange remains to support and contain the armor within the pipe.

3.1.2 Weight as required in 4.1.

3.1.3 Steel scale graduated to 1/32 inch or finer or its decimal equivalent.

3.1.4 Vertical hoisting equipment.

4. PROCEDURE

4.1 Unless otherwise specified in the detail specification, a 15-pound weight shall be used in testing numbers 18, 16 and 14 stranded conductor cable (armored cord), and a 40-pound weight for testing all other cable.

4.2 The armor and sheathing shall be removed from one end of the specimen so as to expose 6 inches of the conductor. The armor shall be cut squarely and any burrs removed by means of a file. The cable shall be inserted into the pipe so that the conductor protrudes from the threaded end. The cap shall be applied so as to contain the armor within the pipe and permit the 6-inch length of protruding conductor to move freely. The protruding conductor shall be securely fastened into a loop and this attached to the weight. The pipe containing the specimen shall be raised to a vertical position with the weight at the bottom and then gently hoisted till the weight hangs freely without swaying.

4.3 After the weight has been suspended for 1 minute the pipe shall be lowered and the distance the conductor has receded into the armor at the end opposite the weighted end shall be measured by means of the scale to the nearest 1/32 inch.

5. RESULTS

5.1 Unless otherwise specified in the detail specification, one specimen from each inspection unit shall be tested.

5.2 The tightness of the armor of the inspection unit shall be the result obtained from the specimens tested.

5.2.1 When more than one specimen is tested from each inspection unit, the tightness of the armor shall be the average of the results obtained from the specimens tested.

5.3 The tightness of the armor wire of the inspection unit shall be recorded to the nearest 1/32 inch.

5.4 The weight used shall be recorded.

Method 2181.1
18 APRIL 2014

OPENING, ARMOR

1. SCOPE

1.1 This method is intended for use in determining the resistance of armor of insulated wire and cable to opening.

2. SPECIMEN

2.1 The specimen should be the armor from a piece of the inspection unit at least 44 inches in length. The specimen should be prepared by removing the conductor from the cable without mechanical damage to the armor.

3. APPARATUS

3.1 The apparatus shall be as follows:

3.1.1 Two clamps each 2 inches wide and of good fit on the specimen to be tested.

3.1.2 Weight as required in 4.1.

3.1.3 Vertical hoisting equipment.

4. PROCEDURE

4.1 Unless otherwise specified in the detail specification, specimens of armor from sizes AWG 18, 16, and 14 stranded conductor cable and all sizes having armor of flattened cross section shall be tested with a 150-pound weight and cables of all other sizes shall be tested with a 300-pound weight.

4.2 One clamp shall be fastened on each end of the specimen, leaving about 2 inches of the armor projected beyond the clamps. The clamps shall be fastened firmly enough to hold the specimen but not tight enough to damage the armor. One clamp shall be connected to the specified weight and the other attached to a joisting apparatus. The unweighted end of the specimen shall be joisted gently until the weight on the other end hangs freely without swaying. The specimen shall hang vertically, and perpendicularly to the face of the clamps. The specimen shall support the specified weight for one minute. The specimen and weight shall be lowered, the clamps removed, and the armor examined visually for openings. Any openings in the specimen of sufficient size to expose any material under the armor shall be recorded.

5. RESULTS

5.1 Unless otherwise specified in the detail specification, one specimen from each inspection unit shall be tested.

5.2 The opening of the armor of the inspection unit shall be the results obtained from the specimen tested.

5.3 Any openings in the armor of sufficient size to expose any material under it shall be recorded.

5.4 The weight used shall be recorded.

Method 2211.1
18 APRIL 2014

ABRASION RESISTANCE

1. SCOPE

1.1 This method is intended for use in determining the abrasion resistant characteristics of the finished wire or cable.
NOTE: Intended for use with neoprene cable.

2. SPECIMEN

2.1 This specimen shall consist of 2 samples of finished insulated wire or cable. Each sample shall be 30 inches in length, minimum.

3. APPARATUS

3.1 The apparatus shall be as follows:

3.1.1 Abrasion tests (see figure 1).

4. PROCEDURE

4.1 Tow untested samples 30 inches in length, shall be mounted securely at one end and weights, as specified in table I, freely suspended to the other end with the cable or wire placed over a squirrel cage abrasion tester as shown on figure 1. A suitable tripping circuit shall be arranged to denote failure by stopping the machine when any bar of the squirrel cage come in contact with the bare conductor of the cable or wire. The specimen shall be subjected to 20 + 2 oscillations per minute. An oscillation shall consist of 5 bars travel forward and backward from a given point.

TABLE I. Diameter under sheath and weight.

Diameter under sheath (in.)	Weight abrasion-aging (pounds)
0.325 and less	2
0.326 to 0.430	2
0.431 to 0.540	2
0.541 to 0.640	3
0.741 to 0.850	3
0.851 to 1.100	6
1.101 to 1.320	6
1.321 to 1.550	6
1.551 to 1.820	6

5. RESULTS

5.1 Unless otherwise specified in the detail specification or specification sheet, one specimen from each inspection unit shall be tested.

5.2 The weight used shall be recorded..

Method 2231.1
18 APRIL 2014

INSULATION STRIPPABILITY

1. Scope.

1.1 This method is intended for use in determining the strippability (adhesion between insulation and conductor) of insulated conductors.

2. Specimen.

2.1 The specimen shall be free of splices, surface cracks, or other visible defects and shall be prepared as shown on figure 1. Preparation shall be done carefully.

3. Apparatus.

3.1 The apparatus shall consist of a tensile tester and a test fixture such as shown on figure 2.

4. Procedure.

4.1 The adhesion to conductors test shall be performed with a tensile tester and a test fixture such as shown on figure 2. The diameter of the hole in the test plate shall be 0.004 ±1.001 inch larger than the diameter of the applicable conductor. The conductor extending through the test plate hole shall be pulled with a constant rate of 0.2 - 0.5 inch per minute. Avoid sudden pulls and jerking. Conductor adhesion shall be defined as the highest tensile tester reading obtained when the conductor - to-insulation bond is broken. In performing this test, physical handling of the specimen shall be kept to a minimum to avoid specimen degradation.

5. Results

5.1 The adhesion to conductor (strippability) requirement, as noted by the reading on the tensile tester, shall meet the specified value.

5.2 Where the insulation is stripped, there shall be no evidence of conductor damage and only a trace of insulation or adhesive remaining which can be easily removed by peeling.

Section 3000

TENSION TESTS

Method 3001.1
18 APRIL 2014

TENSION TESTS, INSULATION AND SHEATH; GENERAL

1. SCOPE

1.1 This group of tests is intended for use in determining the effect of application of a tension load to the insulation and sheaths of insulated wire and cable. Methods of test for tensile strength, ultimate elongation, tensile stress, tearing strength, and set of rubber and thermoplastic compounds, and tensile strength of varnished cambric insulation are described.

2. DEFINITIONS

2.1 Tensile strength. Tensile strength is the force per unit of the original cross-sectional area of the unstretched specimen which is applied at the time of rupture of the specimen. It is calculated by dividing the breaking force in pounds by the cross section of the unstretched specimen in square inches. For example, if a specimen of cross section 0.25 inch by 0.10 inch broke at a force of 50 pounds, the tensile strength would be 50 divided by (0.25 x 0.10) which is equal to 2,000 pounds per square inch. When a stress is applied to the specimen of rubber and thermoplastic compounds, the material stretches with an accompanying reduction in cross-sectional area. Since precise measurements of the specimen cannot be made at the moment the specimen breaks, calculation of the tensile strength at break is based on the cross-sectional area of the specimen before application of any load.

2.2 Elongation. Elongation is the extension between bench marks produced by a tension force applied to a specimen and is expressed as a percentage or original distance between the marks on the unstretched specimen. Ultimate elongation is the elongation at the moment of rupture. For example, if a 1-inch bench length if marked on an unstretched specimen and the specimen is stretched until the bench marks are 7 inches apart, elongation is 7 inches-1 inch = 6 inches or 600 percent.

2.3 Tensile stress. Tensile stress is the force per unit of original cross-sectional area of the unstretched specimen required to stretch the specimen to a stated elongation. It is expressed in pounds of tension load per square inch at the stated elongation. For example, 1,000 pounds per square inch at 500 percent elongation. It is often designated in rubber technology by the term “modulus”.

2.4 Tension set. Set is the elongation remaining after a specimen has been stretched and held at a specified elongation for a given period of time, then relieved of the force and allowed to rest for a definite period of time. It is expressed as a percentage of the original distance between bench marks on the unstretched specimen. For example, a specimen is stretched from 1 to 5 inches for a period of 10 minutes and then released. Its length after the 10 minute rest is 1.2 inches, so that the set under these conditions is 0.20 inch or 20 percent.

2.5 Tearing strength. Tearing strength is the ratio of the maximum force applied during tear of a specimen to the thickness of the unstretched specimen. For example, if a force of 36 pounds is necessary to tear a specimen 0.082 inch thick, the tearing strength would be 36 divided by 0.082, or 439 pounds per inch.

2.6 Median. If the numerical values for a given property are arranged in an ascending or descending order, the median is obtained as follows:

2.6.1 If the number of values is odd, the median is the value in the middle of the series.

2.6.2 If the number of values is even, the median is the arithmetic average of the two middle values.

3. SPECIMEN

3.1 Types.

3.1.1 Two shapes of specimens may be used for tensile strength, elongation, tensile stress, and set of rubber or thermoplastic insulation. These are the dumbbell and straight specimens. A dumbbell specimen, as described in method 3021, shall be used whenever it is practicable to prepare it from the piece (varnished cambric insulation excepted) to be tested. Straight specimens in the form of tubes shall be used for rubber and thermoplastic insulation and sheaths when it is not practicable to prepare a dumbbell. A straight specimen 1 inch wide or the full width of the tape if less than 1 inch wide shall be used for determining the tensile strength of varnished cambric insulation.

3.1.2 Specimens for use in the determination of tearing strength are shown on figure 3111.

3.2 Direction. Specimens shall be taken in the length direction of the wire or cable for rubber or thermoplastic insulation and sheaths and in the length direction of the tape for varnished cambric insulation.

4. PROCEDURE

4.1 Unless otherwise specified in the detail specification, tensile strength, elongation, and tensile stress of rubber or thermoplastic insulation and sheaths shall be determined on the same specimen and during a single test.

4.2 If five specimens are required for determining any one of the above properties, 4.1, these five specimens shall be used for determining all of these properties.

4.3 If the piece from which the specimen is to be prepared is too thick or has an uneven surface that may interfere with the determination of thickness, the piece or portion of the piece shall be buffed as described in method 3011. The specimen shall be permitted to rest at least 30 minutes between buffing and testing. Specimens for tension tests shall be buffed in the strip form before cutting with a die.

5. RESULTS

5.1 Unless otherwise specified in the detail specification, three specimens from each inspection unit shall be tested for tensile strength, elongation, tensile stress, and set of rubber and thermoplastic insulation and sheath except that under the following conditions five specimens shall be tested:

5.1.1 If one or more values do not meet the specified requirements when tested for compliance with specifications.

5.1.2 If referee tests are being made.

5.2 The characteristic of the insulation or sheath of the inspection unit shall be the median of the results obtained from the specimens tested.

Method 3011.1
18 APRIL 2014

BUFFING, INSULATION AND SHEATH

1. SCOPE

1.1 This method is intended for use in removing unevenness of surface from rubber and thermoplastic insulation and jacket materials which would interfere with the measurement of thickness of the specimen or subsequent tests. It also may be used to reduce the thickness of the piece where necessary before testing and to remove glaze or skim coat that may interfere with further examination or tests.

2. PIECE

2.1 The piece for buffing should consist of a portion of the inspection unit of sufficient size to permit the preparation of a specimen of the required size for test.

3. APPARATUS

3.1 The apparatus shall be as follows:

3.1.1 The apparatus shall consist of a grinder equipped with a motor-driven abrasive wheel 5 inches in diameter, composed of approximately number 30 grit. Larger diameter wheels may be used provided the speed is adjusted to give a surface speed equivalent to a 5-inch wheel operating at the speed specified in 4.1. The grinder shall also be equipped with a slow feed in order that very little of the material will be removed at one cut.

4. PROCEDURE

4.1 The speed of the abrasive wheel shall be from 2,500 to 3,500 revolutions per minute if a 5-inch wheel is used. The face of the wheel shall be sharp and the final buffed surface shall be finished uniformly and smoothly. Very little material shall be removed at one cut, otherwise the piece may be injured by overheating. The buffing shall not be carried beyond the point at which the unevenness of gage just disappears, except in the case of thick materials where it is necessary to reduce the thickness for tension or other tests. In such cases it may be desirable to slice the piece to approximately the correct thickness of the required specimen before buffing. The specimen shall be permitted to rest at least 30 minutes between buffing and testing.

Method 3016.1
18 APRIL 2014

CALIBRATION, TENSION TESTING MACHINE

1. SCOPE

1.1 This method is intended for use in calibrating the testing machine described in method 3021.

2. SPECIMEN

2.1 The specimen should be a dumbbell specimen of a tread compound.

3. APPARATUS

3.1 The apparatus shall be as follows:

3.1.1 Testing machine described in method 3021.

3.1.2 A suitable hook which can be attached to the power-actuated grip of the testing machine for holding weights.

3.1.3 Weights, equal to 10, 20, and 50 percent of the capacity of the machine.

4. PROCEDURE

4.1 One end of the dumbbell specimen shall be placed in the upper clamp of the testing machine. The lower clamp shall be removed and there shall be attached to it a hook suitable for holding weights. The lower clamp shall be attached to the lower end of the dumbbell specimen. A weight shall be suspended from the hook on the lower clamp in such a way as to permit the weight assembly to rest on the clamp holder. If the machine has a dynamometer head of the compensating type, it shall be calibrated at two or more settings of the compensator.

4.2 The motor shall be started, with the pawls or other maximum load-indicating device engaged as in normal testing, and the weight applied until the weight assembly is freely suspended by the specimen. If the dial or scale (whichever is normally used in testing) does not indicate the weight applied (or its equivalent in stress for compensating type of testers) within ± 1 percent, the machine shall be thoroughly checked for excess friction in the bearings and all other moving parts.

4.3 After eliminating as nearly as possible all the excess friction, the machine shall be re-calibrated in the aforementioned way until the machine does indicate correctly. The machine shall be calibrated at a minimum of three points, using accurately known weight assemblies covering the range of forces to be measured. The weight of the clamp and hook shall be included as part of the calibration weight. If pawls or ratchets are used during test, they shall also be used during the calibration. Friction in the head may be checked by calibrating with the pawls up.

Method 3021.1
18 APRIL 2014

TENSILE STRENGTH, INSULATION AND SHEATH

1. SCOPE

1.1 This method is intended for use in determining the tensile strength of insulation and sheath compounds. It is applicable to the usual grades of rubber and thermoplastic compounds used for insulation and sheaths.

2. SPECIMEN

2.1 The specimen should be a piece of the insulation or sheath taken from the inspection unit as follows:

2.1.1 Dumbbell. Whenever it is practicable to prepare it from the inspection unit, a dumbbell shaped specimen cut by one of the dies shown on figure 3021 should be used except for varnished cambric insulation. When the size of the piece of material to be tested will permit, the reduced portion of the specimen should be ¼ inch wide and either 1-5/16 or 2-5/16 inches long. If the piece of material to be tested is narrow, a specimen with reduced portion 1/8 inch wide may be used. When the size of the piece permits, enlarged ends of the specimen should be 1 inch wide. When the piece of material is narrow, the enlarged ends of the specimen may be 5/8 inch wide. The thickness of the specimen should not exceed 0.125 inch.

2.1.2 Straight specimen. A straight specimen in the form of a tube should be used when it is not practicable to prepare a dumbbell shaped specimen from the insulation or sheath of the inspection unit.

3. APPARATUS

3.1 The apparatus shall be as follows:

3.1.1 A testing machine which meets the following requirements:

3.1.1.1 A machine shall be power-driven.

3.1.1.2 The applied tension shall be indicated to within ± 1 percent by a dial, scale, or automatic recorder when calibrated according to method 3016.

3.1.1.3 The indicator shall remain at the point of maximum force after rupture of the specimen.

3.1.1.4 The rate of travel of the power actuated grip shall be 20 ± 1 inch per minute and shall be uniform at all times.

3.1.1.5 The machine, when used for a given specimen, should be of such capacity that the maximum load required to break the specimen is not greater than 85 nor less than 15 percent of the rated capacity.

3.1.1.6 If the machine is equipped with a dynamometer head of the compensating type for convenience in eliminating calculations, the head shall have means for making adjustments for variation in thickness of specimens.

3.1.1.7 Grips.

3.1.1.7.1 Dumbbell specimen. When a dumbbell specimen is used, the grips which hold the specimen in the testing machine shall be of a type which tightens automatically as the applied tension increases and exerts a uniform pressure across the gripping surfaces so as to avoid uneven slipping and to favor failure of the specimen in its constricted section.

3.1.1.7.2 Straight. When a straight specimen is used, either wedged or toggle clamps shall be used. The distance between the edges of the clamps at the start of the test shall be 3 ± 1/8 inch.

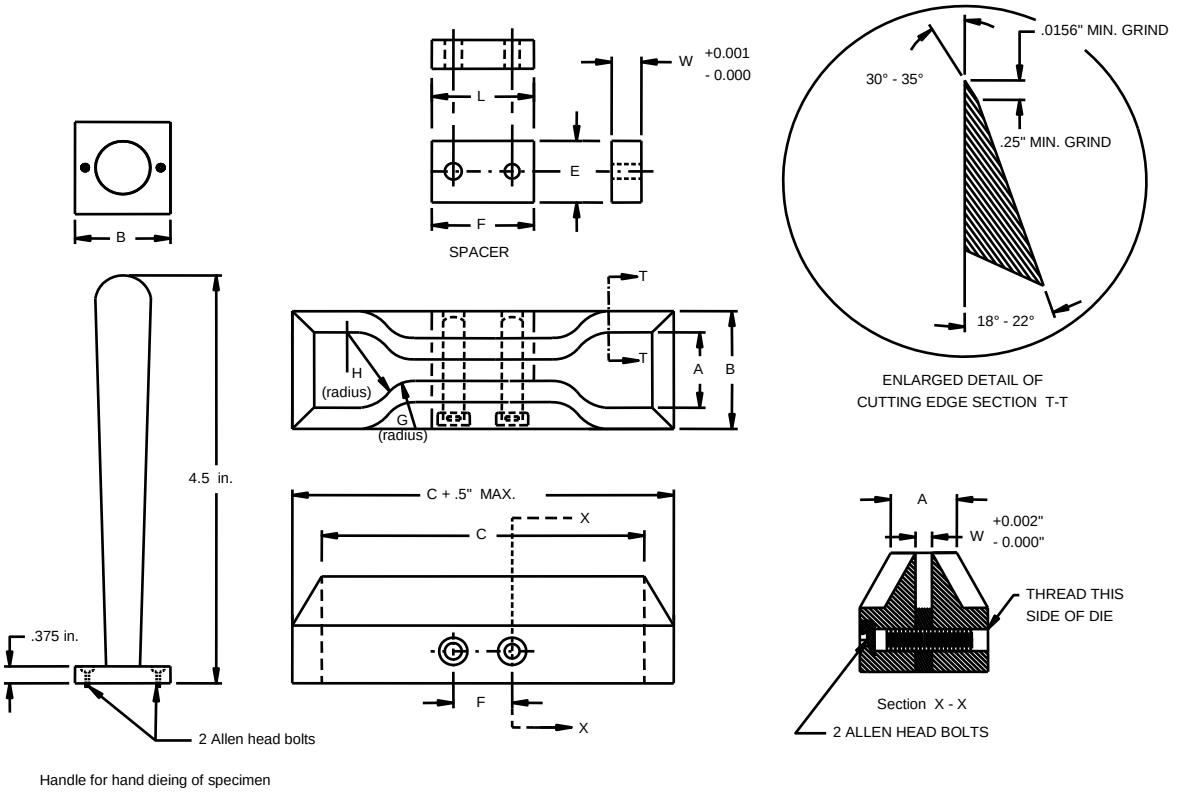

FIGURE 3021

3.1.2 Dies. Metal dies of the shape and construction shown on figure 3021 and of the dimensions shown in the accompanying legend shall be used for stamping or cutting of dumbbell specimens. It is recommended that the reduced section of the die bet equipped throughout its entire length with a spacer to maintain a definite distance between the cutting edges. The spacers shall be held by at least two bolts through the body of the die. The difference between the minimum and maximum distance between the cutting edges of the die in the reduced section shall not exceed 0.002 inch. The inside faces in the reduced section shall be polished and perpendicular to the plane formed by the cutting edges for a depth of at least 0.25 inch. The angle between the inner and outer faces at the cutting edge shall be not less than 30° and not more than 35°. The outer face shall extend at this angle from the cutting edge for approximately 1/64 inch and then shall form an angle between 18° and 22° with the inner face. The dies shall be sharp and free from nicks in order to prevent leaving ragged edges on the specimen.

3.1.2.1 Careful maintenance of die-cutting edges is of extreme importance and may be obtained by daily light honing and touching up the cutting edges with jeweler's hard Arkansas honing stones. The condition of the die may be judged by investigating the rupture point on any series of broken specimens. When broken specimens are removed from the grips of the testing machine, it is advantageous to pile these specimens and note if there is any tendency to break at or near the same portion of each specimen. Rupture points consistently at the same place may indicate that the die is dull, nicked, or bent at that particular position.

3.1.3 Cutting support. Rubber belting, leather belting, light cardboard, or other material with a smooth, slightly yielding surface that will not injure the cutting edge of the die during the cutting or stamping of the specimen.

Table I. Dimensions in inches for standard dies.

Dimension	Tolerance	Die						
		I	II	III	IV	V	VI	VII
A	± 1/32	1	1	1	5/8	5/8	5/8	5/8
B	Maximum	1 ½	1 ½	1 ½	1 1/8	1 1/8	1 1/8	1 1/8
C	Minimum	5 ½	5 ½	4 ½	4	5	5	4 ½
D	± ¼ 1/	1 ¼	1 ¼	1 ¼	1 ¼	1 ¼	1 ¼	1 ¼
D-E	± 1/32	½	½	½	½	½	½	½
F	± 1/16	1 ½	¾	¾	¾	1 ½	1 ½	¾
G	± 1/32	9/16	9/16	9/16	9/16	9/16	9/16	9/16
H	± 1/16	1	1	1	5/8	5/8	5/8	5/8
L	± 1/16	2 5/16	2 5/16	1 5/16	1 5/16	2 5/16	2 5/16	1 5/16
W	See figure	0.500	0.250	0.250	0.125	0.125	0.250	0.250

1/ For dies used in clicking machines, it is preferable that this tolerance be ± 1/64 inch.

4. PROCEDURE

4.1 Preparation of specimen.

4.1.1 Buffing. If the piece from which the specimen is to be prepared is too thick or has an uneven surface that may interfere with the determination of thickness, the piece or portion of the piece shall be buffed as described in method 3011. The specimen shall be permitted to rest at least 30 minutes between buffing and testing. Specimens shall be buffed in the strip form before cutting with a die.

4.1.2 Dumbbell. Specimens of the required shape and size shall be cut or stamped from the piece of material with the required die. To facilitate cutting, the edge of the die may be lubricated with water containing a wetting agent and a corrosion inhibitor before each specimen is cut. The cut edges shall be perpendicular to the other surfaces of the specimen, have a minimum of concavity, and be free from ragged edges.

4.1.3 Straight specimen. A specimen of proper length for clamping in the grips of the testing machine shall be cut from the unit or piece to be tested. The specimen shall be free from nicks. If possible, the specimen should be cut with a die or with a single stroke of the cutting tool.

4.2 Cross-sectional area of specimen.

4.2.1 Dumbbell.

4.2.1.1 Thickness. The thickness of the specimen shall be determined as described in method 1124 except that three measurements shall be made, one at the center and one near each end of the reduced section of the specimen. If the specimen is narrower than the diameter of the foot, measurements shall be made with the center of the micrometer foot coinciding with the longitudinal center line of the specimen so that there will be an equal overlap of the foot on each side. The median of the three measurements shall be used as the thickness in calculating the cross-sectional area of the specimen except that specimens for which the difference between maximum and minimum thickness exceeds 0.003 inch shall be discarded.

4.2.1.2 Width. The width of a specimen shall be the distance, W in the legend for figure 3021, between the cutting edges of the die in the reduced section.

4.2.1.3 The cross-sectional area of the specimen shall be calculated by multiplying the width of the specimen by the median thickness of the specimen.

4.2.2 Straight.

4.2.2.1 The weight of the specimen in grams, the length of the specimen in centimeters, and the density in grams per cubic centimeter shall be determined. The cross-sectional area shall then be calculated from these measurements in the following manner:

$$\text{Cross-sectional area, square inches} = \frac{0.155W}{D \times L}$$

where:

W=the weight of the specimen in air in grams

D=the density of the specimen in grams per cubic centimeter

L=the length of the specimen in centimeters

4.3 Determination of tensile strength.

4.3.1 The testing machine shall be calibrated as described in method 3016.

4.3.2 The specimen shall be placed in the grips of the machine and adjusted symmetrically in order that the tension will be distributed uniformly over the cross section. If the tension is greater on one side of the specimen than on the other, the maximum strength of the specimen will not be developed. The force shall be applied to the specimen at such a rate that the power actuated grip will travel at a uniform speed of 20 ± 1 inch per minute. After rupture of the specimen, the breaking force shall be noted from the dial or scale or by means of an autographic or spark recorder and the value recorded.

5. RESULTS

5.1 Calculation. The tensile strength of the specimen shall be calculated as follows:

$$\text{Tensile strength, p. s. i.} = \frac{F}{C}$$

where:

F=breaking force in pounds

C=cross-sectional area of the unstretched specimen in square inches, 4.2.1.3 or 4.2.2.1.

5.2 Unless otherwise specified in the detail specification, three specimens from each inspection unit shall be tested except that under the following conditions five specimens shall be tested:

5.2.1 If the tensile strength of one or more specimens does not meet the specified requirement for tensile strength in the detail specification.

5.2.2 If referee tests are being made.

5.3 The tensile strength of the insulation or sheath of the inspection unit shall be the median of the results obtained from the specimens tested.

5.4 The tensile strength of the insulation or sheath of the inspection unit shall be recorded to the nearest 10 pounds per square inch.

Method 3031.1
18 APRIL 2014

ELONGATION, INSULATION AND SHEATH

1. SCOPE

1.1 This method is intended for use in determining the elongation of insulation and sheath compounds at break. It is applicable to the usual grades of rubber and thermoplastic compounds used for insulation and sheath.

2. SPECIMEN

2.1 The specimen should be as described in method 3021.

3. APPARATUS

3.1 The apparatus shall be as follows:

3.1.1 The apparatus described in method 3021.

3.1.2 Bench marker having two parallel knife edges ground smooth and true and which are between 0.002 and 0.003 inch in width at the edge and beveled at an angle of not more than 15° to the perpendicular. The distance between the centers of the knife edges shall be 1.000 ± 0.003 inch or 2.000 inches ± 0.003 inch as required.

3.1.3 Stamp pad having a plane unyielding surface (hardwood, plate glass, or plastic) containing ink of the desired color and quality for marking the specimen. The ink shall have no deteriorating effect on rubber or plastic compounds, and shall be of contrasting color to that of the specimen.

3.1.4 Measuring scale or other device graduated in 0.1 inch for indicating elongation.

4. PROCEDURE

4.1 Unless otherwise specified in the detail specification, the elongation shall be determined on the same specimen and at the same time as the tensile strength.

4.2 Preparation of specimen. The specimen shall be prepared as described in method 3021. Two parallel bench marks shall be placed symmetrically on the straight specimen and on the reduced section of the dumbbell specimen perpendicular to the longitudinal axis of the specimen by means of the bench marker and ink. The marks shall be not more than 0.010 inch wide. Care shall be taken not to injure the specimen.

4.3 Determination of elongation. The specimen shall be placed in the grips of the testing machine and the force applied as described for tensile strength, method 3021. The distance between the two bench marks on the dumbbell or straight specimen shall be noted continuously to the nearest 0.1 inch by means of the scale or other device which shall be used in such a manner as not to touch the specimen or only very lightly touch it on the front or back. Two operators may be required to conduct this test. The distance between the bench marks when the specimen ruptures together with the original distance between the bench marks shall be recorded.

5. RESULTS

5.1 Calculation. The elongation of the specimen shall be calculated as follows:

$$\text{Elongation, percent} = \frac{D-G}{G} \times 100$$

where:

D=the distance between the bench marks at the moment of rupture of the specimen, inches

G=the distance between the bench marks on the unstretched specimen, inches

5.2 Unless otherwise specified in the detail specification, three specimens from each inspection unit shall be tested except that under the following conditions five specimens shall be tested:

5.2.1 If the elongation of one or more specimens does not meet the specified requirement for elongation in the detail specification.

5.2.2 If referee tests are being made.

5.3 The elongation of the insulation or sheath of the inspection unit shall be the median of the results obtained from the specimens tested.

5.4 The elongation of the insulation or sheath of the inspection unit shall be recorded to the nearest 5 percent.

Method 3041.1
18 APRIL 2014

TENSILE STRESS, INSULATION AND SHEATH

1. SCOPE

1.1 This method is intended for use in determining the tensile stress of insulation and sheath compounds. It is applicable to the usual grades of rubber and thermoplastic compounds used for insulation and sheaths.

2. SPECIMEN

2.1 The specimen should be as described in method 3021.

3. APPARATUS

3.1 The apparatus shall be as described in methods 3021 and 3031.

4. PROCEDURE

4.1 Unless otherwise specified in the detail specification, the tensile stress shall be determined on the same specimen and at the same time as the tensile strength and elongation.

4.2 The elongation in percent at which the tensile stress is to be determined shall be as specified in the detail specification.

4.3 Preparation of specimen. The specimen shall be prepared as described in methods 3021 and 3031.

4.4 Cross-sectional area. The cross-sectional area of the specimen shall be determined as described in method 3021.

4.5 Determination of tensile stress. The procedure for tensile stress shall be the same as for tensile strength and elongation, methods 3021 and 3031, except that the force in pounds necessary to stretch the specimen to the required elongation shall be recorded.

5. RESULTS

5.1 Calculation. The tensile stress of the specimen shall be calculated as follows:

$$\text{Tensile stresses, p. s. i., } = \frac{F}{C}$$

where:

F=force in pounds required to stretch the specimen to the required elongation

C=cross-sectional area of the unstretched specimen in square inches (4.4)

5.2 Unless otherwise specified in the detail specification, three specimens from each inspection unit shall be tested except that under the following conditions five specimens shall be tested:

5.2.1 If the tensile stress of one or more specimens does not meet the specified requirement for tensile stress in the detail specification.

5.2.2 If referee tests are being made.

5.3 The tensile stress of the insulation or sheath of the inspection unit shall be the median of the results obtained from the specimens tested.

5.4 The tensile stress of the insulation or sheath of the inspection unit shall be recorded to the nearest 10 pounds per square inch.

5.5 The elongation at which tensile stress is determined shall be recorded.

Method 3111.1
18 APRIL 2014

TEARING STRENGTH, SHEATH

1. SCOPE

1.1 This method is intended for use in determining the resistance to tear of sheath compounds. It is applicable to the usual grades of rubber and thermoplastic compounds used for sheaths.

2. SPECIMEN

2.1 The specimen should be a piece of the sheath taken from the inspection unit of the shape and dimensions shown in figure 3111. The thickness at the enlarged end of the specimen should be not greater than 0.150 inch and not less than 0.040 inch.

3. APPARATUS

3.1 The apparatus shall be as follows:

3.1.1 Apparatus as described in method 3021.

3.1.2 Sharp razor blade for slitting the specimen.

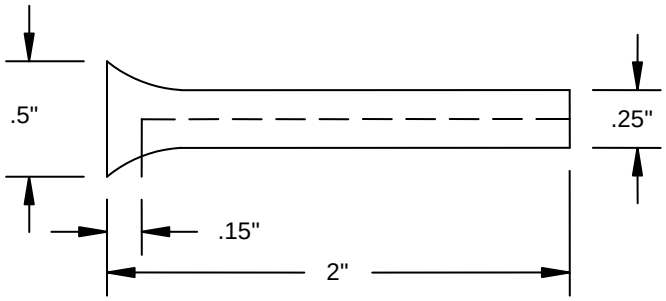

Figure 3111

4. PROCEDURE

4.1 Preparation of specimen.

4.1.1 Buffing. If the piece from which the specimen is to be prepared is too thick or has an uneven surface that may interfere with the determination of thickness, the piece or portion of the piece shall be buffed as described in method 3011.

4.1.2 The specimen shall be prepared by means of a die described in method 3021. The shape of the specimen shall be as described on figure 3111. It shall be cut with the grain running the long way of the specimen. To facilitate cutting, the piece of material from which the specimen is to be cut, and the edge of the die may be lubricated with water containing a wetting agent and a corrosion inhibitor. The specimen shall be 2 inches long, the reduced portion ¼ inch wide, and the enlarged portion ½ inch wide. Using a sharp blade, a slit shall be cut along the center of the constricted portion, extending to within 0.15 inch of the end of the enlarged part of the specimen. The slit shall be cut approximately 90° to the flat surface of the specimen.

4.2 Measurement of specimen. The thickness of the specimen shall be measured as described in method 1124 before cutting the slit, except that three measurements shall be made at the enlarged end and not more than 0.25 inch from the end of the piece. The median of the three measurements shall be recorded for use in calculating the tearing strength.

4.3 Determination of tearing strength. One end of the split portion of the specimen shall be clamped in the lower grip of the tensile machine. The force shall then be applied with a lower jaw speed of 20 ± 1 inch per minute. The maximum force in pounds registered on the dial recorder or scale shall be recorded in calculating the tearing strength.

5. RESULTS

5.1 Calculation. The tearing strength of the specimen shall be calculated as follows:

$$\text{Tearing strength, pounds per inch of thickness} = \frac{F}{T}$$

where:

F = tearing force in pounds

T = thickness, inch

5.2 Unless otherwise specified in the detail specification, five specimens from each inspection unit shall be tested except that under the following conditions seven specimens shall be tested:

5.2.1 If the tearing strength of one or more specimens does not meet the specified requirement for tearing strength in the detail specification.

5.2.2 If referee tests are being made.

5.3 The tearing strength of the sheath of the inspection unit shall be the median of the results obtained from the specimens tested.

5.4 The tearing strength of the sheath of the inspection unit shall be recorded to the nearest 1 pound per inch of thickness.

Method 3161.1
18 APRIL 2014

TENSION SET, INSULATION AND SHEATH

1. SCOPE

1.1 This method is intended for use in determining the elongation remaining in rubber insulation and sheath compounds after a specimen has been held at a specified elongation for a given period of time, then relieved of the force and allowed to rest for a definite period of time.

2. SPECIMEN

2.1 The specimen should be as described in method 3021.

3. APPARATUS

3.1 The apparatus shall be as follows:

3.1.1 Grips as used in the testing machine described in method 3021.

3.1.2 Any satisfactory device for stretching the specimen at a uniform speed and which will hold it at a specified elongation for a definite period of time. An apparatus that has been found satisfactory is shown on figure 3161.

3.1.3 Stop watch or other suitable timing device which will register the time in seconds and minutes.

3.1.4 Measuring scale or other device graduated in 0.01 inch for indicating the elongation or set. A straight rod of a length equal to the exact distance required between the bench marks after stretching has been found suitable for determining the required elongation.

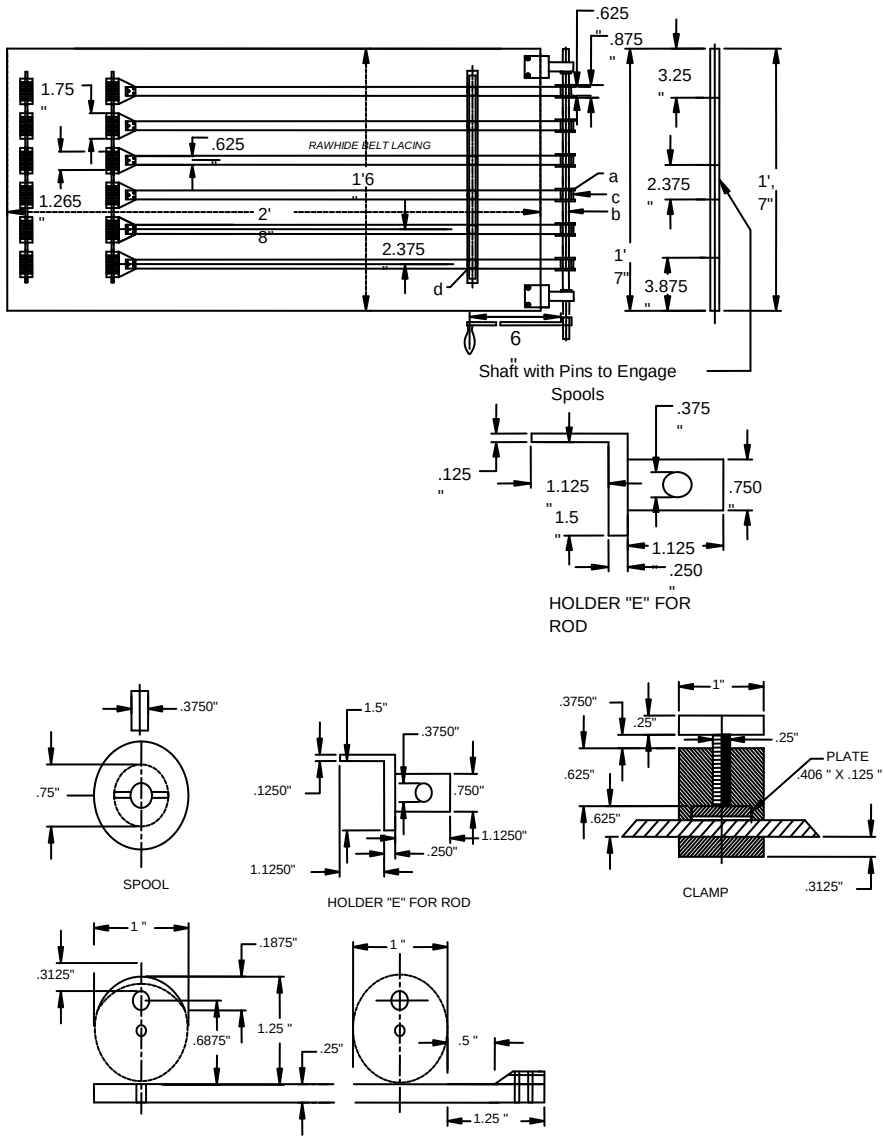

FIGURE 3161. Apparatus for “set” test.

4. PROCEDURE

4.1 The elongation or distance between the bench marks of the stretched specimen shall be as specified in the detail specification. If no elongation is specified, the specimen shall be stretched an amount equal to three-fourths of the ultimate elongation as determined by method 3031.

4.2 Unless otherwise specified in the detail specification, the specimen shall be held at the specified elongation for 2 minutes.

4.3 Unless otherwise specified in the detail specification, the specimen shall be allowed to rest for 2 minutes after release before the set is measured.

4.4 Preparation of specimen. The specimen shall be prepared as described in methods 3021 and 3031.

4.5 Determination of set. The specimen shall be placed in the grips of the testing apparatus in the same manner as described in method 3021. The grips shall be separated at an approximately uniform rate of speed such as to require about 15 seconds to reach the required elongation.

4.5.1 The specimen shall be held at the required elongation for the required time, then released immediately without being allowed to snap back, and allowed to rest for the required time.

4.5.2 After the rest period, the distance between the bench marks shall be measured to the nearest 0.01 inch.

4.5.3 In stretching the specimen it has been found convenient to use a measured rod of a length equal to the exact distance required between the two bench marks on the stretched specimen. Holding the rod beside the test specimen while it is being stretched simplifies the operation and reduces the chance of stretching the specimen more than the required amount. A stop watch shall be used for recording the time required for the various operations.

5. RESULTS

5.1 Calculation. The tension set of the specimen shall be calculated as follows:

$$\text{Tension set, percent, } = \frac{L_2 - L_1}{L_2} \times 100$$

where:

L_1=the distance between bench marks of the unstretched specimen, inches

L_2=the distance between bench marks of the specimen at the end of the rest period

5.2 Unless otherwise specified in the detail specification, three specimens from each inspection unit shall be tested except that under the following conditions five specimens shall be tested:

5.2.1 If the tension set of one or more specimens does not meet the specified requirement for tension set in the detail specification.

5.2.2 If referee tests are being made.

5.3 The tension set of the insulation or sheath of the inspection unit shall be the median of the results obtained from the specimens tested.

5.4 The tension set of the insulation or sheath of the inspection unit shall be recorded to the nearest one percent.

5.5 The elongation, time the specimen was held at the specified elongation, and the test period shall be recorded.

Method 3171.1
18 APRIL 2014

TENSILE STRENGTH, VARNISHED CLOTH INSULATION

1. SCOPE

1.1 This method is intended for use in determining the tensile strength of cloth tape insulation. It is particularly applicable to varnished cloth tape.

2. SPECIMEN

2.1 Unless otherwise specified in the detail specification, the specimen should be a piece of the varnished cloth at least 14 inches in length and 1 inch wide, or full width if less than 1 inch, taken from a single tape (layer) of the inspection unit.

3. APPARATUS

3.1 The apparatus shall be as follows:

3.1.1 A testing machine which meets the following requirements:

3.1.1.1 The machine shall be power-driven.

3.1.1.2 The applied tension shall be indicated by a dial, scale, or automatic recorder to within ± 2 percent up to and including 50-pound load and to within ± 1 percent for over 50 pounds.

3.1.1.3 The indicator shall remain at the point of maximum force after rupture of the specimen.

3.1.1.4 The rate of travel of the power-actuated grip shall be 12 ± 0.5 inches per minute and shall be uniform at all times.

3.1.1.5 The machine, when used for a given specimen, should be of such capacity that the maximum load required to break the specimen is not greater than 85 percent nor less than 15 percent of the rated capacity.

3.1.1.6 Grips. The face of each jaw of each grip shall measure 1 inch by 2 or more inches, the long dimension being perpendicular to the direction of application of force. The jaws shall have smooth, flat faces with edges slightly rounded to prevent cutting of the specimen.

4. PROCEDURE

4.1 At least 14 inches of each tape (layer) shall be removed from the inspection unit. Unless otherwise specified in the detail specification, 10 percent of the tapes but in no case less than 5 tapes shall be drawn at random for test from each inspection unit.

4.2 Unless otherwise specified in the detail specification, the specimen shall be conditioned for 46 hours at a temperature of 23° ± 1°C. (73.5° ± 2°F) and a relative humidity of 50 ± 4 percent.

4.3 The thickness of the specimen shall be determined as described in method 1051 and the minimum value obtained recorded as T.

4.4 The width of the specimen shall be determined as described in method 1411 except that measurements shall be made at 5 places equally spaced along the length of the portion of the specimen that is to be placed between the grips of the testing machine, and the minimum value recorded as *W*.

4.5 The ratio of the clearance between the grips of the testing machine to the width of the specimen shall be not less than 5 to 1 and not more than 10 to 1 at the start of the test. The specimen shall be placed in the machine with the long dimension parallel to and the short dimension perpendicular to the direction of the applied force. The speed of the power-actuated grip of the machine shall be 12 inches ± 0.5 inch per minute. The machine shall be set in motion and the force required to break the specimen read from the dial scale, or recorder, and the value recorded as *F*.

4.6 If the specimen skips between the jaws, breaks in or at the edges of the jaws, or if for any reason attributable to faulty technique an individual measurement falls markedly below the specified minimum, such individual result shall be disregarded and another specimen shall be tested.

5. RESULTS

5.1 Calculation. The tensile strength of the specimen shall be calculated as follows:

$$\text{Tensile strength, p. s. i., } = \frac{F}{TW}$$

where:

F=the breaking force of the specimen, pounds

T=the minimum thickness of the specimen, inch

W=the minimum width of the specimen, inch

5.2 Unless otherwise specified in the detail specification, two specimens from each tape selected shall be tested.

5.3 The tensile strength of the tape shall be the average of the results obtained from the specimens tested.

5.4 The tensile strength of each tape tested shall be recorded to the nearest 10 pounds per square inch.

Method 3211.1
18 APRIL 2014

TENSILE STRENGTH AND ELONGAITON, SOFT OF ANNEALED CONDUCTORS

1. SCOPE

1.1 This method is intended for use in determining the tensile strength and elongation of soft of annealed solid copper conductors or wires of stranded conductors of insulated wire and cable. It is applicable to both coated and uncoated conductors.

2. SPECIMEN

2.1 The specimen should be the bare conductor or a wire from a stranded conductor removed from a piece of the inspection unit at least 20 inches in length.

3. APPARATUS

3.1 The apparatus shall be as follows:

3.1.1 Testing machine. The testing machine shall meet the following requirements:

3.1.1.1 The machine shall be power-driven.

3.1.1.2 The applied tension shall be indicated by a dial, scale, or automatic recorder to within ± 1 percent when properly calibrated.

3.1.1.3 The indicator shall remain at the point of maximum force after rupture of the specimen. A spring-balanced type of machine is satisfactory if equipped to prevent recoil of the spring.

3.1.1.4 The rate of travel of the power-actuated grip shall be 10 ± 2 inches per minute under no load and shall be uniform.

3.1.1.5 The machine, when used for a given specimen, should be of such capacity that the maximum load required to break the specimen is not greater than 85 percent nor less than 15 percent of the rated capacity.

3.1.1.6 The machine shall accommodate specimens of 10-inch bench length.

3.1.1.7 Grips. The grips of the machine shall be designed to produce as nearly as possible uniformly distributed pure axial tension in the specimen. Grips shall be spool-type for specimens less than 0.208 inch in diameter, and wedge-type for specimens 0.208 inch and larger in diameter.

3.1.2 Steel scale graduated to 1/32 inch or finer, or its decimal equivalent.

4. PROCEDURE

4.1 Two parallel bench marks 10 ± 1/32 inch apart shall be placed on the specimen without damage to the copper.

4.2 The diameter of the wire shall be measured as described in method 1421. Measurements shall be made at nine places equally distributed between the bench marks, and the minimum value recorded as *D*.

4.3 The specimen shall be placed in the testing machine so that the bench marks are between the spools when spool grips are used. When using the usual wedge-type grip there shall be a distance of at least 1 inch between each bench mark and the adjacent grip. The speed of the power-actuated grip shall be 10 ± 2 inches per minute under no load.

4.4 After rupture of the specimen the breaking force shall be read from the dial recorder, or scale to the nearest pound and the value recorded as *F*. If the specimen breaks outside the bench marks or within 1 inch of either bench mark, the results shall be discarded and additional specimens tested until breaks are obtained within the prescribed portion.

4.5 The broken specimen shall be immediately laid on a smooth surface, the ruptured areas fitted together as closely as possible with the two portions placed on a straight line, and the distance between the bench marks measured to the nearest 1/32 inch. The length shall be recorded as *L*.

5. RESULTS

5.1 Calculation.

5.1.1 The tensile strength of the specimen shall be calculated as follows:

$$\text{Tensile strength, p. s. i.} = \frac{4F}{\pi(D)^2}$$

where:

F=the breaking force of the specimen, in pounds

D=minimum diameter of the specimen, inch

5.1.2 The elongation of the specimen shall be calculated as follows:

$$\text{Elongation, percent} = \frac{L-10}{10} \times 100$$

where:

L=the distance between bench marks on the specimen immediately after rupture, inches

5.2 Unless otherwise specified in the detail specification, three specimens from each inspection unit shall be tested.

5.3 The tensile strength or elongation of the conductor or wire of the inspection unit shall be the average of the results obtained from the specimens tested.

5.4 The tensile strength of the conductor or wire of the inspection unit shall be recorded to the nearest 10 pounds per square inch.

5.5 The elongation of the conductor or wire of the inspection unit shall be recorded to the nearest 0.5 percent.

Method 3212.1
18 APRIL 2014

TENSILE STRENGTH AND ELONGATION, MEDIUM HARD-DRAWN OR HARD-DRAWN CONDUCTORS

1. SCOPE

1.1 This method is intended for use in determining the tensile strength and elongation of medium hard-drawn and hard-drawn solid copper or copper alloy conductors or wires of stranded conductors of insulated wire and cable. It is applicable to both coated and uncoated conductors and wires.

2. SPECIMEN

2.1 When the diameter of the conductor is over 0.208 inch, the specimen should be a 20-inch length of the copper conductor or wire from the stranded conductor taken from the inspection unit. When the diameter of the conductor is 0.208 inch and less, the specimen should be approximately 80 inches in length taken from the inspection unit. For elongation tests the specimens should be free from joints.

3. APPARATUS

3.1 The apparatus shall be as follows:

3.1.1 Testing machine as described in method 3211 except that the testing machine shall be equipped with the wedge-type grips, and the power-actuated grip shall be adjusted to move at the rate of 2 ± ½ inch per minute.

3.1.2 Steel scale graduated to 1/64 inch or finer, or its decimal equivalent.

4. PROCEDURE

4.1 The general procedure shall be as described in method 3211, except that the power-actuated grip shall move at the rate of 2 ± ½ inch per minute.

4.2 Elongation of wire with nominal diameter of 0.208 inch or larger shall be determined as the permanent increase in length, due to the breaking of the wire in tension, measured between bench marks placed 10 ± 1/64 inch apart on the specimen as described in method 3211.

4.3 The elongation of wire with diameter less than 0.208 inch shall be determined by measurement made between the grips of the testing machine. The zero length shall be the distance between the grips when a force equal to 10 percent of the specified tensile strength shall have been applied and the final length shall be the distance between the grips at the time of rupture. The zero length shall be as near 60 inches as practicable. The fracture shall be between bench marks in the case of specimens so marked and between the grips of the testing machine when specimens approximately 60 inches in length are involved, and not closer than 1 inch to either the bench mark or either grip of the machine.

5. RESULTS

5.1 Calculation.

5.1.1 The tensile strength of the specimen shall be calculated as follows:

$$\text{Tensile strength, p. s. i.} = \frac{4F}{\pi(D)^2}$$

where:

F=the maximum force required to break the specimen, pounds.

D=the minimum diameter of wire, inch.

5.1.2 The elongation of the specimen shall be calculated as follows:

For wire 0.208 inch diameter or greater:

$$\text{Elongation, percent} = \frac{L-10}{10} \times 100$$

where:
L=the distance between bench marks on the specimen immediately after rupture, inches

For wire less than 0.208 inch in diameter:

$$\text{Elongation, percent} = \frac{L_t - L_0}{L_0} \times 100$$

where:

L_t=the distance between grips of the testing machine at the time of rupture of specimen, inches.

L_0=the distance between grips of the testing machine when the specimen is under a stress equal to 10 percent of the specified tensile strength, inches.

5.2 Unless otherwise specified in the detail specification, three specimens from each inspection unit shall be tested.

5.3 The tensile strength or elongation of the conductor or wire of the inspection unit shall be the average of the results obtained from the specimens tested.

5.4 The tensile strength of the conductor or wire of the inspection unit shall be recorded to the nearest 10 pounds per square inch.

5.5 The elongation of the conductor or wire of the inspection unit shall be recorded to the nearest 0.05 percent for 10-inch specimens and to the nearest 0.01 percent for 60-inch specimens.

Section 4000

ACCELERATED AGE TESTING

Method 4001.1
18 APRIL 2014

RESISTANCE TO HEAT, OXYGEN, AIR, LIGHT, AND OZONE; GENERAL

1. SCOPE

1.1 This group of tests is intended for use in determining the relative resistance of rubber and rubber-like insulating and jacket compounds to deterioration influence by heat, air, light, oxygen, and ozone. These tests consist of exposing specimens from rubber and rubber-like compounds, having previously determined physical characteristics, to controlled deteriorating influences for a specified period of time after which time the same physical characteristics of the compound are again measured. Changes in tensile strength and elongation are most commonly used to indicate the degree of deterioration and, unless otherwise specified in the detail specification, these tests should be used.

1.2 The results obtained from tests in this group are comparative only and should be evaluated against the performance of insulation and jacket compounds of known natural and accelerated aging characteristics. The results of accelerated tests should not be used alone to predict or estimate the natural life of these materials.

2. SPECIMEN

2.1 The specimen should be as described in the method of test used for determining the specified characteristics of the compound before and after aging. If tensile strength and elongation are used to measure the deterioration, the specimen should be as described in methods 3021 and 3031, respectively.

2.1.1 The physical characteristic of the insulating and jacket compound should be determined as described in the required method of test. Specimens should then be exposed to the conditions specified in the detail specification, the same characteristic again determined and the change in the characteristics calculated. If it is not necessary to destroy the specimen in determining the initial characteristic of the compound, the same specimen should be exposed.

2.1.2 If changes in tensile strength and elongation are used as a measure of deterioration, these characteristics of the compound should be determined as described in methods 3021 and 3031 respectively. Additional specimens should be prepared, measured, and exposed to the conditions specified in the detail specification. The tensile strength and elongation of the exposed specimens shall then be determined as described in methods 3021 and 3031 respectively, and the change calculated. Unless otherwise specified in the detail specification, the tensile strength after aging should be based on the cross-sectional area of the unaged specimen.

2.1.3 Unless otherwise specified in the detail specification, bench marks for determining elongation of aged specimens should be placed on the specimen after aging.

2.1.4 If buffing of the specimen is necessary, it should be done before exposure.

3. PRECAUTIONS

3.1 The following precautions shall be observed in conducting accelerated aging tests:

3.1.1 The contents of the oven, bomb, or other container in which the specimens are exposed shall be restricted to specimens known to be of the same composition.

3.1.2 The temperature shall be measured by means of a thermometer or thermo-couple mounted so as to indicate the temperature of the specimen. However, if the container is completely surrounded by steam or by a liquid bath maintained within the specified temperature range, the temperature of the specimen shall be considered to be the same as that of the bath.

3.1.3 Radiation shields shall be placed between the specimen and any portions of the walls of the container not maintained within the specified temperature limits.

3.1.4 Provisions shall be made for suspending the specimens vertically without touching each other or the sides of the chamber.

3.1.5 Automatic temperature controls shall be used and a recording thermometer employed to record the temperature.

3.1.6 The test chamber shall be preheated to the exposure temperature before the specimen is placed in it. If the temperature within the container changes while the specimen is being placed in it, the container and contents shall reach the specified temperature within 15 minutes after the specimen has been placed in the chamber.

3.1.7 The exposure period shall start at the time the specimen is placed in the chamber. At the end of the exposure period, the specimen shall be removed from the chamber and permitted to rest at room temperature for not less than 16 nor more than 96 hours before determining its properties.

3.1.8 The material used for marking bench lines or other markings on the specimen shall not be detrimental to the rubber compound.

3.1.9 Copper or brass parts shall not be exposed to the atmosphere used in the aging chamber.

3.1.10 If a liquid heating medium is used, the liquid or its vapors shall not come in contact with the specimen.

4. CONDITIONS OF EXPOSURE

4.1 The conditions of exposure shall be as described in the detail specification. Many combinations of temperature, pressure, and time of exposure may be used. As an aid towards standardization, it is recommended that the temperature and pressure specified in the detail specifications be selected from the following suggested conditions. In general, the conditions selected should be such that the deterioration will not be so great as to prevent the determination of the final physical properties unless the aging characteristics of the compound are known to be poor.

4.2 In the oxygen pressure test the increase in temperature from 70° to 80° C. would be expected to approximately double the rate of oxidation of the rubber or other oxidizable material.

TABLE I. Suggested test conditions

Test	Medium	Temperature °C ± 1°C	Pressure, p. s. i.	Minimum volume of aging chamber per gram of rubber or other oxidizable materials, milliliters
Oxygen pressure	Oxygen	70	290 to 310	10
Modified oxygen pressure	Do.	80	48 to 52	10
Do.	Do.	89	290 to 310	10
Air pressure	Air	127	78 to 32	100
Air oven	Air circulated by convection so as to change at least once per hour.	70	Atmospheric	10
Do.	Do.	90	Do.	10
Do.	Do.	100	Do.	10
Do.	Do.	121	Do.	10
Do.	Do.	149	Do.	10
Test tube	Air circulated by convection	1/ 121 to 149	Do.	

1/ As specified in the detail specification or test method.

Method 4011.1
18 APRIL 2014

OXYGEN PRESSURE TEST, INSULATION AND SHEATH

1. SCOPE

1.1 This method is intended for use in determining the effect of elevated temperature and oxygen under pressure on rubber and rubber-like insulation and sheaths of insulated wire and cable.

2. SPECIMEN

2.1 The specimen should be as described in methods 3021 and 3031 or other method of test required for determining the amount of deterioration, 4.2.

3. APPARATUS

3.1 The apparatus shall be as follows:

3.1.1 An oxygen-pressure chamber consisting of a metal vessel designed to maintain an internal atmosphere of oxygen under uniformly controlled pressure and temperature as required in 4.1. The size of the chamber shall be such that specimens may be suspended vertically therein without undue crowding and without touching each other or the sides of the chamber. Provisions shall be made for rapid opening and closing of the apparatus for introduction and removal of the specimen. Two suitable designs are shown on figures 4011A and 4011B.

3.1.2 A pressure gage attached to the chamber for registering the pressure.

3.1.3 A safety valve, attached to the aging chamber, set to release at approximately 500 pounds per square inch pressure.

3.1.4 A source of heat which is optional shall be located outside of the aging chamber proper.

3.1.5 The heating medium is optional but a liquid medium is preferred because of more rapid heat transfer.

Caution: Special safety precautions are necessary if oil or other combustible organic fluids are used as the heating medium because of danger of fire or explosion. When the design shown on figure 4011A is used, the entire chamber shall be immersed in the heating medium. If air is used, the following special precautions shall be taken in order that accurate, uniform heating is obtained in all parts of the aging chamber: (1) The heated air shall be thoroughly circulated around the vessel by means of mechanical agitation, (2) baffles shall be used as required to prevent local overheating and dead spots, and (3) the preferred location of the temperature control shall be adjacent to the recording thermometer.

3.1.6 A thermo-regulator for automatic temperature control of the heating medium.

3.1.7 A recording thermometer shall be located in the heating medium to record the actual temperature during the test. Preferably the thermometer bulb should be close to the pressure chamber but not touching it. If air is used as the heating medium, an actual check of the temperature shall be made by means of maximum reading thermometers placed in various parts of the oven housing to verify the uniformity of heating.

3.1.8 Equipment for complete circulation of the heating medium.

3.1.9 A source of oxygen under pressure.

4. PROCEDURE

4.1 Unless otherwise specified in the detail specification, the test shall be carried out at a temperature of 70° ± 1°C (158° ± 2°F) and an oxygen pressure of 300 ± 10 pounds per square inch for a period of 94 hours ± ½ hour.

4.2 Unless otherwise specified in the detail specification, tensile strength and elongation tests, methods 3021 and 3031 respectively, shall be used to determine the deterioration of the insulation or sheath due to aging.

4.3 After adjusting the aging chamber to the required temperature, the specimen shall be suspended vertically in the chamber which shall be closed immediately and the oxygen pressure applied. At least 10 milliliters of capacity shall be available for each gram of oxidizable material. The exposure period shall start at the time the specimen is placed in the chamber and shall continue for the required time under the required conditions without opening the vessel.

4.4 At the end of the exposure period, the pressure in the aging chamber shall be released at a slow and uniform rate, requiring at least 5 minutes for a complete release of the pressure. This procedure is necessary to avoid possible formation of porosity in the specimen. The specimen shall be removed from the aging chamber immediately after the release of the pressure and then set aside on a flat surface to rest for not less than 16 hours and not more than 96 hours at room temperature before tests are made.

4.5 At the end of the rest period, unless otherwise specified in the detail specification, 4.2, tensile strength and elongation shall be determined on the aged specimen as described in methods 3021 and 3031, respectively. If other properties are required, the specimen shall be tested as described in the specified method. The same test shall be conducted on aged and unaged specimens for the purpose of comparison in determining the degree of deterioration of the aged materials.

4.6 Adequate safety precautions shall be taken when heating oxidizable organic materials in oxygen under pressure since the rate of reaction may become very rapid in some cases, particularly if a large surface area is exposed and very high pressures may develop. Care shall be taken to avoid the introduction of grease or oil into the chamber.

5. RESULTS

5.1 Calculation. The change in tensile strength, elongation, or other characteristic of the insulation or sheath of the inspection unit due to aging, shall be calculated as follows:

$$\text{Change in characteristic, percent} = \frac{O-E}{O} \times 100$$

where:

O=the value obtained on the unaged insulation or sheath of the inspection unit

E=the value obtained on the aged insulation or sheath of the inspection unit

5.2 Unless otherwise specified in the detail specification, the number of specimens tested from each inspection unit shall be as required in the method of test, 4.2, used for determining the deterioration of the insulation or sheath.

5.3 The change in the characteristic of the insulation or sheath of the inspection unit shall be recorded to the nearest one percent.

5.4 The temperature, pressure, and time of exposure used shall be recorded.

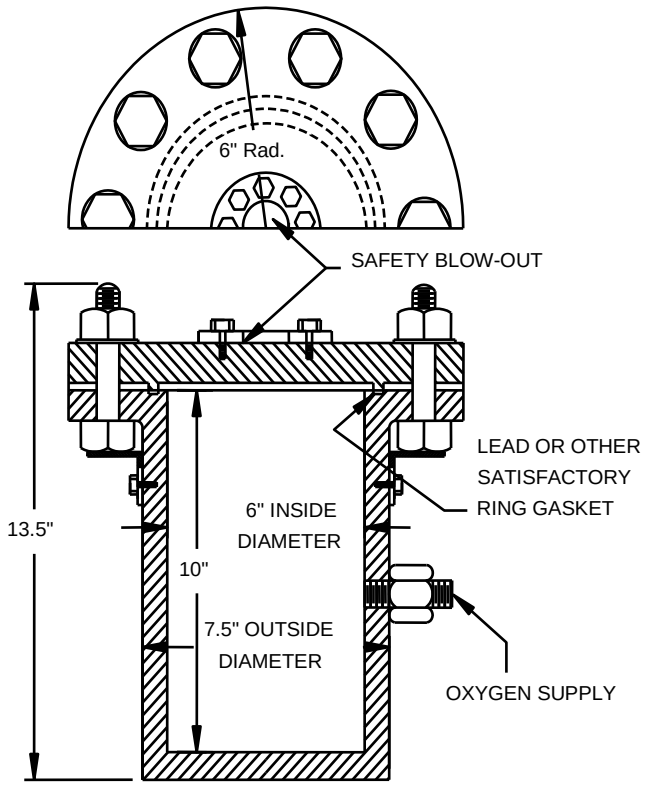

FIGURE 4011A.

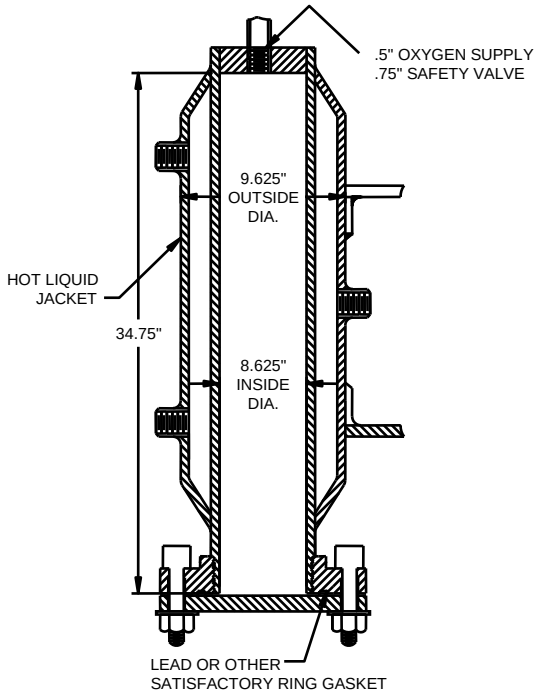

FIGURE 4011B. Lend or other satisfactory ring gasket.

Method 4021.1
18 APRIL 2014

AIR PRESSURE TEST, INSULATION AND SHEATH

1. SCOPE

1.1 This method is intended for use in determining the effect of elevated temperature and air pressure on rubber and rubber-like insulation and sheaths of insulated wire and cable. This test is not recommended for compounds that have not been specifically designed to withstand elevated temperatures in service. The test is sensitive to small temperature variations.

2. SPECIMEN

2.1 The specimen should be as described in methods 3021 and 3031 or other method of test required for determining the amount of deterioration, 4.2.

3. APPARATUS

3.1 The apparatus shall be as follows:

3.1.1 An air-pressure chamber consisting of a metal vessel designed to maintain an internal atmosphere of air under uniformly controlled pressure and temperature as required in 4.1. The size of the chamber shall be such that the specimens may be suspended vertically therein without undue crowding and without touching each other or the sides of the chamber. Provisions shall be made for rapid opening and closing of the apparatus for introduction and removal of specimens. Two suitable designs are shown on figures 4011A and 4011B.

3.1.2 A pressure gage attached to aging chamber for registering the pressure.

3.1.3 A safety valve, attached to chamber, set for release at approximately 200 pounds per square inch pressure.

3.1.4 A source of heat which is optional shall be located outside of the aging chamber proper.

3.1.5 The heating medium is optional but a liquid medium is preferred because of more rapid heat transfer.

Caution: Special safety precautions are necessary if oil or other combustible organic fluids are used as the heating medium because of danger of fire or explosion. When the design shown on figure 4011A is used, the entire chamber shall be immersed in the heating medium. If air is used, the following special precautions shall be taken in order that accurate, uniform heating is obtained in all parts of the aging chamber: (1) The heated air shall be thoroughly circulated around the vessel by means of mechanical agitation, (2) baffles shall be used as required to prevent local overheating and dead spots, and (3) the preferred location of the temperature control shall be adjacent to the recording thermometer.

3.1.6 A thermo-regulator for automatic temperature control of the heating medium.

3.1.7. A recording thermometer shall be located in the heating medium during the test. Preferably the thermometer bulb should be close to the pressure chamber but not touching it. If air is used as the heating medium, an actual check of temperature shall be made by means of maximum reading thermometers placed in various parts of the oven housing to verify the uniformity of heating.

3.1.8 Equipment for positive, rapid, and complete circulation of heating medium.

3.1.9 A source of compressed air (free from oils, dirt, moisture, etc.).

4. PROCEDURE

4.1 Unless otherwise specified in the detail specification, the test shall be carried out at a temperature of 127° ± 1°C. (261° ± 2°F), and an air pressure of 80 ± 2 pounds per square inch for a period of 20 hours ± ¼ hour.

4.2 Unless otherwise specified in the detail specification, tensile strength and elongation tests, methods 3021 and 3031, respectively, shall be used to determine the deterioration of the insulation or sheath due to aging.

4.3 After adjusting the aging chamber to the required temperature, the specimen shall be suspended vertically in the chamber which shall be closed immediately and air pressure applied. At least 100 milliliters of capacity shall be available in the chamber for each gram of oxidizable material. The exposure period shall start at the time the specimen is placed in the chamber and shall continue for the required time under the required conditions without opening the vessel.

4.4 At the end of the exposure period, the pressure in the aging chamber shall be released at a slow and uniform rate, requiring at least 4 minutes for a complete release of the pressure. This procedure is necessary to avoid possible formation of porosity in the specimen. The specimen shall be removed from the aging chamber immediately after the release of the pressure and then set aside on a flat surface to rest for not less than 16 hours and not more than 96 hours at room temperature before tests are made.

4.5 At the end of the rest period, unless otherwise specified in the detail specification, tensile strength and elongation shall be determined on the aged specimen as described in methods 3021 and 3031 respectively. If other properties are required the specimen shall be tested as described in the specified method. The same test shall be conducted on aged and unaged specimens for the purpose of comparison in determining the degree of deterioration of the aged material.

4.6 Adequate safety precautions shall be taken when heating oxidizable organic materials in air under elevated temperature and pressure since the rate of oxidation may become very rapid in some cases, particularly if a large surface area is exposed, and very high pressures may develop. Care shall be taken to avoid introduction of grease or oil into the chamber.

5. RESULTS

5.1 Calculation. The change in tensile strength, elongation, or other characteristic of the insulation or sheath of the inspection unit due to aging shall be calculated as follows:

$$\text{Change in characteristic, percent} = \frac{O-E}{O} \times 100$$

where:

O=the value obtained on the unaged insulation or sheath of the inspection unit.

E=the value obtained on the aged insulation or sheath of the inspection unit.

5.2 Unless otherwise specified in the detail specification, the number of specimens tested from each inspection unit shall be as required in the method of test 4.2 used to determining the deterioration of the insulation or sheath.

5.3 The change in the characteristic of the insulation or sheath of the inspection unit shall be recorded to the nearest one percent.

5.4 The temperature, pressure, and time of exposure used shall be recorded.

Method 4031.1
18 APRIL 2014

AIR OVEN TEST, INSULATION AND SHEATH

1. SCOPE

1.1 This method is intended for use in determining the effect of elevated temperatures and air at normal atmospheric pressure on rubber and rubber-like insulation and sheaths of insulated wire and cable.

2. SPECIMEN

2.1 The specimen should be as described in methods 3021 and 3031 or other method of test required for determining the amount of deterioration, 4.2.

3. APPARATUS

3.1 The apparatus shall be as follows:

3.1.1 The equipment listed in 3.2 may be used where air is employed as the heating medium. Apparatus in 3.3 may be used where the heating medium consists of a liquid bath.

3.2 Air as a heating medium.

3.2.1 A circulating air oven with provisions for suspending specimens without crowding and without touching each other or the sides of the oven. The volume should not be less than 12 x 12 x 12 inches and not more than 36 x 36 x 48 inches.

3.2.2 A source of heat, which is optional, shall be located outside of the aging chamber proper.

3.2.3 A thermo-regulator for automatic temperature control of the heating medium.

3.2.4 Equipment for complete circulation of the heating medium so as to keep the temperature of the air throughout the oven within ± 1°C (2°F). The following precautions shall be taken: (a) If a motor-driven fan is used, the air in the oven shall not come in contact with the fan motor-brush discharge because of danger of ozone formation, (b) baffles shall be used as required to prevent local overheating and dead spots, and (c) the thermostatic control shall be so located as to give accurate temperature control of the heating medium. The preferred location is adjacent to the recording thermometer.

3.2.5 Recording thermometers located in the heating medium to record the actual aging temperature in various parts of the oven.

3.3 Liquid as a heating medium.

3.3.1 Apparatus employing a liquid heating medium consisting of several small aging containers submerged in a thermostatically-controlled liquid bath. The equipment shown on figure 4031 has been found suitable for the purpose.

3.3.2 A section of the bath showing one aging container is shown on figure 4031. The container consists of a nickel-plated brass cylinder 4 ½ inches in diameter and 8 3/8 inches high with a cover which rests on a flange inside the cylinder about 2 inches from the top. The space above the cover is filled with thermal insulating material. Circulation of air is by convection through a ¼-inch inside diameter tube mounted in the metal cover. One of the tubes extends to within about ½ inch of the bottom of the container and the other one extends about 6 inches above the cover. The latter tube is insulated with cork.

3.3.3 A water or other liquid bath capable of holding several submerged specimen containers and equipped with an automatic thermostatic control and means for obtaining a uniform temperature in all parts of the bath. The temperature of the air at the specimen will be approximately 0.5°C (1°F) below that of the liquid bath. The bath is equipped with a cover containing about 1 inch of thermal insulating material. Several aging containers are fitted into the bath with the top being flush with the cover of the bath.

3.3.4 Means for suspending the specimens vertically in the aging container without touching each other or the sides of the container. This can be accomplished by fastening hooks to the underside of the cover.

4. PROCEDURE

4.1 Unless otherwise specified in the detail specification, the test shall be carried out at a temperature of 70° ± 1°C (158° ± 2°F) for a period of 166 hours ± 1 hour.

4.2 Unless otherwise specified in the detail specification, tensile strength and elongation tests, methods 3021 and 3031 respectively, shall be used to determine the deterioration of the insulation or sheath due to aging.

4.3 After adjusting the aging container to the required temperature, the specimen shall be suspended vertically and the container closed immediately. At least 10 milliliters of capacity shall be available in the container for each gram of oxidizable material. The exposure period shall start at the time the specimen is placed in the aging container and shall continue for the required time under the required conditions without opening the container.

4.4 At the end of the exposure period, the specimen shall be removed from the aging container and set aside on a flat surface to rest for not less than 16 hours and not more than 96 hours at room temperature, before tests are conducted.

4.5 At the end of the rest period, unless otherwise specified in the detail specification, tensile strength and elongation shall be determined on the aged specimen as described in methods 3021 and 3031. If other properties are required the specimen shall be tested as described in the specified method. The same test shall be conducted on aged and unaged specimens for the purpose of comparison in determining the degree of deterioration of the aged material.

5. RESULTS

5.1 Calculation. The change in tensile strength, elongation or other characteristic of the insulation or sheath of the inspection unit due to aging shall be calculated as follows:

$$\text{Change in characteristic, percent} = \frac{O-E}{O} \times 100$$

where:

O=the value obtained on the unaged insulation or sheath of the inspection unit

E=the value obtained on the aged insulation or sheath of the inspection unit

5.2 Unless otherwise specified in the detail specification, the number of specimens tested from each inspection unit shall be as required in the method of test, 4.2, used for determining the deterioration of the insulation or sheath.

5.3 The change in the characteristic of the insulation or sheath of the inspection unit shall be recorded to the nearest 1 percent.

5.4 The temperature and time of exposure used shall be recorded.

Method 4041.1
18 APRIL 2014

TEST TUBE HEAT-AGING, INSULATION AND SHEATH

1. SCOPE

1.1 This method is intended for use in determining the effect of high temperatures and a controlled circulation of air on rubber and rubber-like insulation and sheaths of insulated wire and cable. The selection of suitable periods of aging depends upon the rate of deterioration of the particular compound being tested. Temperatures that have been used vary from 120°C to 149°C (250° ± 300°F). Exposure periods frequently used are 10, 20, 40, 70, and 166 hours. In any case the conditions selected should be such that the deterioration will not be so great as to prevent the determination of the final physical properties.

2. SPECIMEN

2.1 The specimen should be as described in methods 3021 and 3031 or other method of test required for determining the amount of deterioration, 4.2.

3. APPARATUS

3.1 The apparatus shall be as follows:

3.1.1 An aluminum or glass test tube 38 for holding the specimens. The test tube shall be provided with a cork stopper fitted with two glass tubes 9 ±0.6 millimeters in outside diameter and a wall thickness of 1.0 millimeter. The inlet tube shall extend 4 ½ inches above the top of the stopper and to within ½ inch of the bottom of the test tube. The outlet tube shall extend 12 inches above the top of the stopper and the lower opening of the tube shall extend 1 ½ inches below the bottom surface of the stopper.

3.1.2 Provisions for vertically suspending the specimens as near the bottom of the test tube as possible without touching each other or the sides or bottom of the tube.

3.1.3 A liquid bath or other apparatus as an aluminum block equipped with thermostatic control which will control the temperature within ±1°C (2°F) of the required temperature.

3.1.4 Equipment for rapid circulation of the liquid heating medium if used so as to keep the temperature throughout the liquid within ± 1°C (2°F).

3.1.5 Recording thermometers to record the temperature in various parts of the heating medium during the test.

4. PROCEDURE

4.1 Unless otherwise specified in the detail specification, the test shall be carried out at a temperature of 120° ± 1°C (248° ± 2°F) for a period of 20 hours ± ¼ hour.

4.2 Unless otherwise specified in the detail specification, tensile strength and elongation tests, methods 3021 and 3031, respectively, shall be used to determine the deterioration of the insulation or sheath, due to aging.

4.3 After the temperature of the heating medium has been adjusted, the test tube containing the specimen shall be placed in the medium so that the lip of the tube does not extend more than 2 inches above the surface of the medium. Not more than three specimens shall be placed in one test tube and all specimens in one tube shall be from a single compound. The exposure period shall start at the time the test tube, containing the specimen, is placed in the heating, medium and shall continue for the required time under the required conditions without opening or removing the tube.

4.4 At the end of the exposure period the specimen shall be removed from the tube and set aside on a flat surface to rest for not less than 16 hours and not more than 96 hours at room temperature before tests are conducted.

4.5 At the end of the rest period, unless otherwise specified in the detail specification, tensile strength and elongation shall be determined of the aged specimen as described in methods 3021 and 3031. If other properties are required, the specimen shall be tested as described in the specified method. The same test shall be conducted on aged and unaged specimens for the purpose of comparison in estimating the degree of deterioration of the aged material.

5. RESULTS

5.1 Calculation. The change in tensile strength, elongation or other characteristic of the insulation or sheath of the inspection unit due to aging shall be calculated as follows:

$$\text{Change in characteristic, percent} = \frac{O-E}{O} \times 100$$

where:

O=the value obtained on the unaged insulation or sheath of the inspection unit.

E=the value obtained on the aged insulation or sheath of the inspection unit.

5.2 Unless otherwise specified in the detail specification, the number of specimens tested from each inspection unit shall be as required in the method of test, 4.2 used for determining the deterioration of the insulation or sheath.

5.3 The change in the characteristic of the insulation or sheath of the inspection unit shall be recorded to the nearest one percent.

5.4 The temperature and time of exposure used shall be recorded.

Method 4111.1
18 APRIL 2014

RESISTANCE OF OZONE, INSULATION AND SHEATH

1. SCOPE

1.1 This method is intended for use in determining the resistance of rubber and rubber-like insulation and sheaths to ozone attack which may be encountered in connection with the operation of high-voltage cable.

2. SPECIMEN

2.1 Each specimen should consist of a piece of the insulation or sheath from the inspection unit taken at least 5 feet from the end of the coil or reel of wire or cable. The length of the specimen necessary for test will depend on the diameter of the wire or cable. The specimen should not include any tapes or outer coverings except when a tape or sheath has been applied directly over the insulation prior to and left in place during vulcanization.

2.2 When the over-all diameter of the wire or cable is less than 1 inch, the specimen should be bent at room temperature through an angle of 360° around a mandrel, without twisting. The diameter of a mandrel should be 4 ± 0.5 times the outside diameter of the wire or cable. The two ends of the piece should be tightly clamped to the mandrel to prevent any movement of the bent section during the test.

2.3 When the over-all diameter of the wire or cable is 1 inch and greater, the specimen should be bent at room temperature through an angle of not less than 180° around a mandrel without twisting. The diameter of the mandrel should be 6 ± 0.5 times the outer diameter of the wire or cable.

2.4 In the case of flat twin cable, the minor diameter should be used in arriving at the size of the mandrel.

2.5 Two specimens should be prepared from each inspection unit. One specimen should be prepared as described in either 2.2 or 2.3, as required. The other specimen should be prepared in the same way but bent in the reverse direction.

3. APPARATUS AND REAGENTS

3.1 The apparatus and reagents shall be as follows:

3.1.1 A suitable apparatus for ozone resistance test is shown assembled on figure 4111. All connections for parts of the apparatus carrying ozonized air should be of ozone-resisting materials. The apparatus consists essentially of the following parts.

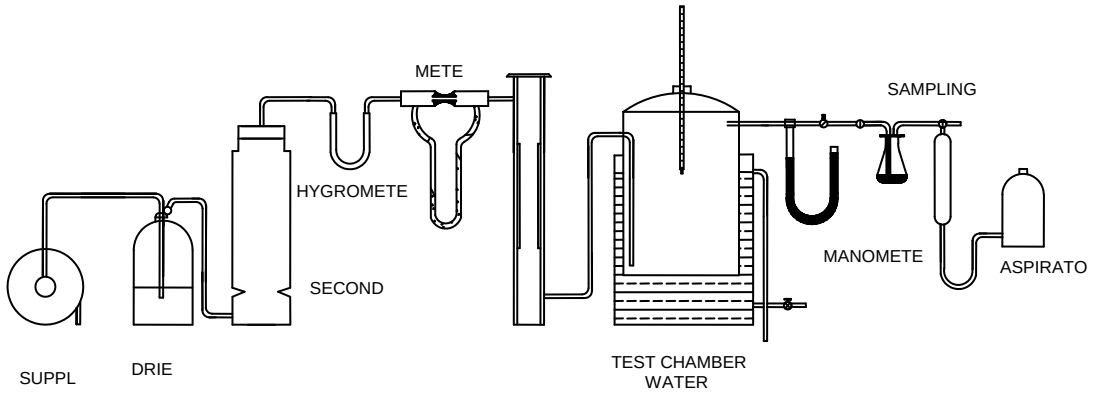

FIGURE 4111.

3.1.1.1 An air pump or compressed air supply for circulating air through the test chamber.

3.1.1.2 An air drier consisting of 500 ml gas washing bottles filled to about 30 percent of capacity with sulfuric acid, sp. Gr. 1.83, connected in series with a drier containing anhydrous calcium chloride or other suitable desiccant.

3.1.1.3 A moisture indicator consisting of a U-tube hygrometer containing anhydrous copper sulfate.

3.1.1.4 A calibrated flow meter having a capacity of at least 25 cu. Ft. per hour, for measuring the rate of flow of air through the system.

3.1.1.5 A generator for ozonizing the air consists of two concentric electrodes, separated by a thin glass dielectric, between which voltage is applied. The generator is supplied by a potential transformer equipped with variable voltage control of 20 to 30 kilovolt rating.

3.1.1.6 An aging chamber of ozone-resisting material and of sufficient size to accommodate the largest specimen to be tested. A chamber of about 18 to 20 inches in height with a capacity of from 2,000 to 5,000 cubic inches is usually required. A convenient form of chamber is a glass jar with cover which permits easy access to the interior and allows inspection of the specimen without opening the chamber. The chamber is equipped with a mineral wool filter placed between two perforated grills near the bottom. The ozonized air is lead from the generator to a space below the filter. If an air conditioned room is not available, the temperature of the chamber may be controlled by immersing it in a water bath with accurately controlled temperature. A thermometer is placed in the chamber with the bulb as near the specimen as possible. The chamber is equipped with a two-way stopcock, one acting as a discharge to the outside and the other as a bypass.

3.1.1.7 A manometer for measuring the pressure is connected to the outlet pipe of the aging chamber.

3.1.1.8 A sampling bottle for collecting a specimen for the determination of ozone concentration is connected to the outlet tube of the chamber.

3.1.1.9 A 500-ml gas collecting burette is connected through a two-way stopcock to the sampling bottle. A 500-ml aspirator bottle is connected to the gas burette by means of rubber tubing.

3.1.2 Starch indicator solution.

3.1.3 Standard iodine solution, 100 mg. per liter.

3.1.4 Standard sodium, thiosulfate solution.

3.1.5 Potassium iodide, 1 percent solution.

3.1.6 Acetic acid, 10 percent solution.

4. PROCEDURE

4.1 Preparation and standardization of solutions. The solutions shall be prepared and standardized as follows:

4.1.1 Starch indicator solution. A fresh solution may be prepared for use each day by dissolving 1 gram of soluble starch in 100 ml. of boiling distilled water. A solution that may be used for several days shall be prepared by mixing 1 gram of soluble starch with 40 ml. of cold distilled water, boiling until solution is complete, diluting to about 200 ml. with cold water and adding 2 grams of zinc chloride. The solution shall be set aside for several hours and then decanted.

4.1.2 Iodine solution. A weighing bottle containing 2 grams of potassium iodine and 10 grams of distilled water shall be weighed and then about 0.1 gram of reagent grade iodine crystals added to the solution on the balance. The solution shall be accurately weighed to determine the amount of iodine added. The solution shall then be accurately transferred to a volumetric flask and the volume made to 1 liter with distilled water. The solution should be stored in a dark bottle in a cool, dark place.

4.1.3 Sodium thiosulfate solution. A sodium thiosulfate solution of approximately the same strength as the iodine solution shall be prepared by dissolving 0.24 gram of reagent-grade sodium thiosulfate ($Na_2S_2O_35H_20$) in distilled water and diluting to 1 liter. The solution shall be standardized against the iodine solution. Since the solution gradually loses its strength, the strength of this solution shall be checked against the iodine solution at frequent intervals. The strength of the thiosulfate solution shall be calculated as follows:

$$E = \frac{F \times C}{S}$$

where:

E=the iodine equivalent of sodium thiosulfate expressed as mg. of iodine per ml. of $Na_2S_2O_3$.

F=the number of ml. of the iodine solution.

C=the concentration of the iodine in mg. per ml.

S=the number of ml. of sodium thiosulfate used to titrate the solution.

4.2 Determination of ozone concentration. The ozone sampling bottle containing 100 ml. of the 1-percent potassium iodine solution acidulated with a few drops of acetic acid shall be connected to the gas burette and the two-way stopcock from the test chamber as shown on figure 4111. The two-way stopcock on the burette shall be opened to the air and the burette filled with water to the mark by lifting the aspirator bottle. The stopcock shall be closed to the air and opened to the sampling bottle, and the sampling cock on the test chamber opened. The aspirator bottle shall be lowered until the burette is emptied. At this point, 500 ml. of the gas will have bubbled through the potassium iodide solution. The stopcock shall then be closed and the bottle removed, a few drops of starch indicator added and the solution titrated with standard sodium thiosulfate solution. Since 1 mg. of iodine is equivalent to 0.1 ml. of ozone at room temperature and pressure (within the accuracy of this method of analysis at room temperature and pressure) the ozone may be calculated as follows: O= E x 0.1, where *O* is the number of ml. of ozone at room temperature and pressure equivalent to 1 ml. of sodium thiosulfate solution used, and E is the iodine equivalent of sodium thiosulfate expressed as mg. of iodine per ml. of thiosulfate. The percent of ozone = $\frac{S \times O}{M} \times 100$

where *S* is the number of ml. of thiosulfate used to titrate the solution and *M* is the number of ml. of the sample collected.

4.3 Testing of rubber specimen.

4.3.1 Unless otherwise specified in the detail specification, the test shall be carried out using an exposure period of 3 hours at a temperature of 25° ± 2°C (77° ± 4°F) and an ozone concentration of not less than 0.015 percent by volume.

4.3.2 Air shall be passed through the test apparatus at a constant rate of flow for at least 15 minutes prior to inserting the specimen. The flow of gas shall be adjusted to between 10 and 20 cubic feet per hour as measured on the flow meter. The manometer shall indicate a slight pressure of approximately ½ inch of water above atmospheric pressure in the test chamber. The pressure may be controlled by the degree of closure of the discharge stopcock. The voltage of the ozone generator shall be regulated so as to give a concentration of ozone as required. The ozone concentration shall be checked as described in 4.2. The temperature of the air in the test chamber shall be regulated as required. When constant conditions are obtained, the specimen free from mechanical damage shall be bent, inserted in the test chamber, and exposed for the required period of time. At the end of the exposure period, the specimen shall be examined for cracking.

4.3.3 Flat twin cable shall be bent on the minor axis of its cross-section only.

5. RESULTS

5.1 Unless otherwise specified in the detail specification, two specimens from each inspection unit shall be tested.

5.2 The ozone resistance of the insulation or sheath of the inspection unit shall be the results obtained from the specimens tested.

5.3 Any cracking or other damage of the insulation or sheath shall be recorded.

5.4 The ozone concentration temperature and time of exposure shall be recorded.

Method 4131.1
18 APRIL 2014

RESISTANCE TO LIGHT, INSULATION AND SHEATH

1. SCOPE

1.1 This method is intended for use in determining the comparative resistance of rubber and rubber-like insulation and sheaths of insulated wire and cable to deterioration when exposed to light having a frequency range approximating that of sunlight but having a greater intensity in the ultra-violet range than sunlight. The method is not applicable to hard or semihard rubbers. The deterioration resulting from the exposure is determined by observing the nature and degree of cracking and checking and by comparing the tensile strength and elongation of the exposed specimen with that of unexposed specimen taken from the same piece of material. The specimen is exposed in the stretched condition. The quantity of radiation to which the specimen is exposed is measured by means of the decomposition of uranyl oxalate solution.

2. SPECIMEN

2.1 The specimen should be a piece of the insulation or sheath taken from the inspection unit. It should be not less than 5/8 inch in width and 6 inches in length, and should be buffed to a uniform thickness of 0.35 ± 0.005 inch. If the size of the insulation is too small to permit preparation of a specimen of the above dimensions, a tube specimen six inches in length may be used.

3. APPARATUS AND REAGENTS

3.1 The apparatus and reagents shall be as follows:

3.1.1 A light source consisting of a vertical ventilated, flaming carbon are designed to accommodate two or three pairs of carbons, number 22 upper and number 13 lower; the arc to burn between only one pair of carbons at a time. The carbons shall be of the cored type sunshine carbons (of the National Carbon Company or equal) designed to duplicate as closely as possible the spectral distribution of sunlight. The arc shall operate on 60 amperes and 50 volts across the arc on alternating current or on 50 amperes and 60 volts across the arc on direct current.

3.1.2 Unless otherwise specified in the detail specification, the arc shall be surrounded by Corex *D* filters or other enclosure having equivalent absorbing and transmitting properties. Each Corex *D* panel shall be 5/64 to 1/16 inch in thickness. Filters shall be replaced after 8000 hours of service.

3.1.3 A cylindrical rotating framework designed to carry specimen holders in such a way that the surface of the specimens are 18 ½ inches ± ½ inch from the center of the arc. The frame work shall rotate around the arc at a uniform speed of one complete revolution every 2 hours.

3.1.4 Specimen holder suitable for mounting the specimen vertically while it is rotated about the carbon arc to provide uniform distribution of light. The holders shall be designed to accommodate either one specimen 2 by 6 inches or two specimens each 1 by 6 inches in size and to stretch them to any elongation up to 20 percent. A suitable holder is shown on figure 4131A.

3.1.5 A cylindrical drum of corrosion-resisting material for enclosing the lamps and framework. The cylinder shall be equipped with a protective cover for shielding the operator from radiation from the arc, and overflow for carrying away the water from a spray, and a sliding door to permit access to the specimens.

3.1.6 A fresh water spray nozzle mounted inside the cylindrical drum in such a position that each specimen will be exposed to a complete wetting throughout its length one time during each revolution of the framework. Each nozzle shall be adjusted so as not to strike the Corex *D* filters and to deliver between 1 ½ and 2 gallons of water per hour. The water shall be maintained between 10° and 25°C (50° and 77°F) during the test.

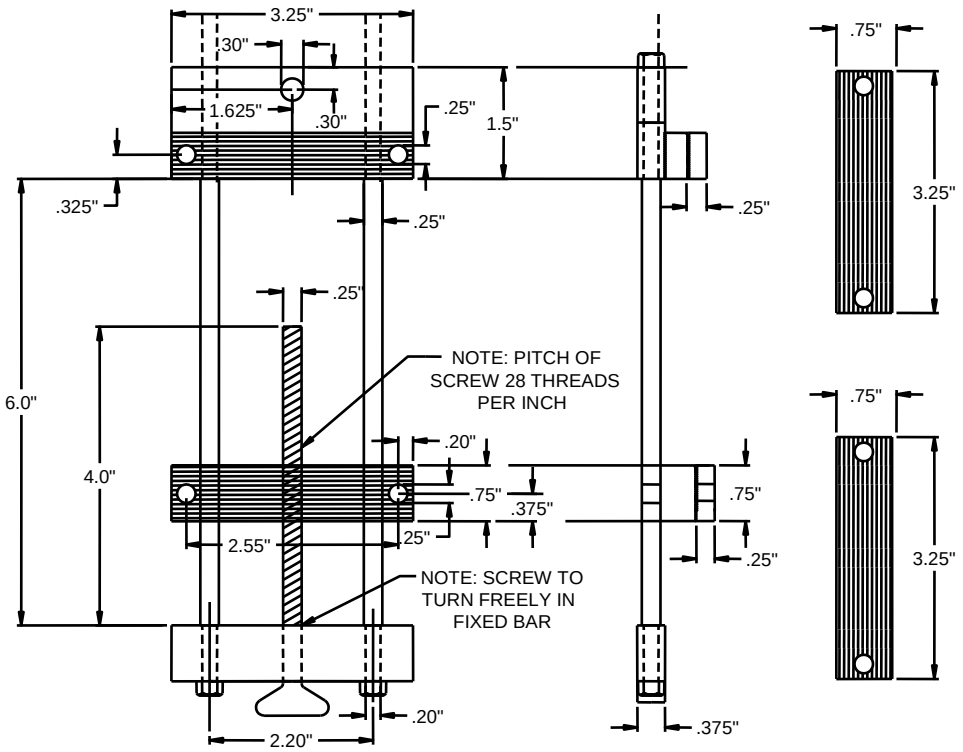

FIGURE 4131A. Rubber holder for light aging. All parts except rods to be made of aluminum. Rods to be made of monel.

3.1.7 An exhaust fan, for effectively ventilating the arc, with a capacity of 100 ± 20 cubic feet per minute.

3.1.8 A thermometer for determining the temperature of the air at the position of the specimen in the drum. The bulb of the thermometer shall be shielded by a cylinder of bright metal foil 2 inches in diameter and 2 inches in length.

3.1.9 A suitable framework, complete with cables, pulleys, and counterweights for raising the lamp for inspection and replacement of carbons.

3.1.10 Electrical control equipment for automatic operation of the entire unit and maintaining the current of the arc approximately constant. The equipment shall include a constant voltage regulator to maintain the input voltage at 220 ± 1 volt. It shall also contain a push-button station for starting and stopping the unit, interlocked with the main line contractor to insure complete electrical isolation of the arc equipment when changing carbons or working on the interior mechanism of the lamp.

3.1.11 A cell of transparent fused quartz for exposing the actinometer solution to the radiation from the arc of the design and dimensions shown on figure 4131B.

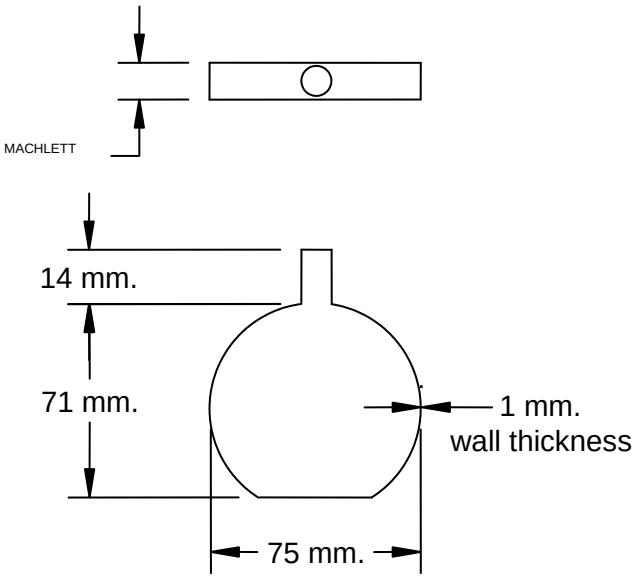

FIGURE 4131B. Transparent fused quartz cell.

3.1.12 A holder for enclosing the cell except for the face which is exposed to the light being measured. The exposed cross-sectional area of the cell shall be measured with an accuracy of at least ±1 percent. The inside of the cell holder shall be completely covered with a dull, black enamel paint. The holder shall be designed to take the place of a specimen holder and so constructed that the center of the cell occupies the same relative horizontal position as the center of a rubber specimen.

3.1.13 Automatic dispensing burette, figure 4131C.

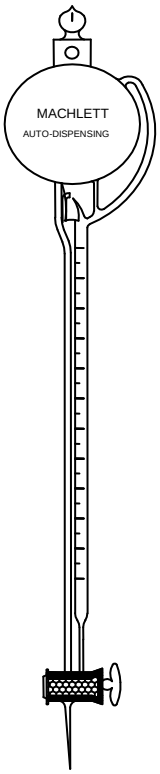

FIGURE 4131C. Diagram of dispensing burette-Machlett type.

3.1.14 Radiation actinometer solution.

Substances, reagent grade	Grams per liter	Molar value
Oxalic acid, hydrated ($H_2C_2O_4\ 2H_2O$) - - - - - - - - -	6.30	0.050
or oxalic acid, anhydrous ($H_2C_2O_4$) - - - - - - - - -	4.50	.050
Uranyl sulphate ($UO_2SO_43H_2O$) - - - - - - - - - - - - -	4.20	.0100

3.1.15 Evaluating solution.

	Grams per liter	Oxidation equivalent
Potassium permanganate ($KMnO_4$) - - -	3.16	0.100 N

4. PROCEDURE

4.1 Preparation, storage, and dispensing of solutions. The solutions 3.1.14 and 3.1.15, may be prepared in ordinary diffused light.

4.1.1 The 0.1N potassium permanganate solution shall be prepared by dissolving 3.16 grams of reagent grade in distilled water and making the volume to 1 liter. The solution shall be set aside for 1 week in a dark place then filtered through a 1/8 inch glass fiber cloth and stored in a glass stoppered bottle protected from the light by a heavy coating of black paint.

4.1.2 The actinometer solution shall be prepared by dissolving 6.30 grams of reagent grade hydrated oxalic acid ($H_2C_2O_42H_2O$) or 4.50 grams of anhydrous oxalic acid ($H_2C_2O_2$) and 4.20 grams of reagent grade uranyl sulphate ($UO_2SO_43H_2O$) in distilled water and diluted to 1 liter. The solution shall be stored in a glass stoppered bottle painted with a heavy coat of black paint to protect the solution from light. An automatic dispensing burette, shown on figure 4131B when heavily coated with black paint to exclude light is suitable for storing and dispensing the solutions.

4.2 Standardization of solutions. The evaluating solution (potassium permanganate) shall be standardized against reagent grade sodium oxalate in the usual way, with such precautions that its strength shall be known within an accuracy of at least ±1 percent. The strength of the potassium permanganate shall be expressed in terms of milligrams of anhydrous oxalic acid per ml. of solution. The actinometer solution shall be titrated against the standard potassium permanganate. An accurately measured volume of 50 milliliters of the actinometer solution shall be transferred to a tall form 200 milliliter beaker, 20 to 25 milliliters of distilled water added, and the solution acidified with 5 milliliters of 1 to 3 sulfuric acid. The beaker shall be covered with a porcelain dish and the solution heated to 95°C (203°F) in a light-proof water bath, transferred to an open glass water bath and maintained at this temperature while resting on a flat, white-glass base. The solution shall be clearly seen by light from the glass base illuminated by a “daylight” lamp. The hot solution shall be titrated with the standard potassium permanganate evaluating solution from a dispensing burette while stirring constantly until an orange color is obtained which persists for at least 30 seconds while stirring. The titrating shall be conducted in such a way that the volumes of solution used are precise to within ± 0.05 milliliter.

4.3 Calibration of radiation. The intensity of radiation of the light shall be measured in terms of the milligrams of oxalic acid decomposed per square decimeter per minute, and the quantity of radiation in any given period of time shall be measured in terms of the milligrams of oxalic acid decomposed per square decimeter. An accurately measured volume of the actinometer solution shall be transferred to the quartz cell from a dispensing burette. The cell shall be immediately placed in the holder to prevent exposure of the solution to light. The cell holder shall be mounted on the cylindrical rotating framework in the lighting unit in a similar position as that of a rubber specimen holder. The solution shall be exposed to the light under normal operating conditions for a suitable period of time. The time of exposure of the actinometer solution shall be sufficient to decompose not less than 10 percent nor more than 30 percent of the oxalic acid in the cell. At the end of the exposure period, the actinometer solution shall be transferred from the cell to a 200-ml beaker and then titrated with the potassium permanganate evaluating solution as described in 4.2. The quantity of the evaluating solution required for the titration shall be designed as V_1. A volume of the actinometer solution equal to that used in the exposure cell shall be titrated under the same conditions, omitting the exposure to light, and the quantity of permanganate solution required for the titration recorded as V_2. The quantity of oxalic acid in mg., Q, decomposed by the radiation is given in the equation Q=a (V_2-V_1) where a is the number of mg. of oxalic acid equivalent to 1 ml. of evaluating solution. The quantity or dosage of radiation is expressed as Q/A and the intensity of radiation as Q/A_t where A is the area of the cell, in square decimeters, and t is the time of exposure in minutes.

4.4 Exposure of specimen.

4.4.1 Unless otherwise specified in the detail specification, the total dosage of radiation shall be 1.16 x 104 mg. per square decimeter with a plus or minus tolerance of 2 percent. Approximately 50 hours exposure should be sufficient for this dosage.

4.4.2 Unless otherwise specified in the detail specification, tensile strength and elongation tests, methods 3021 and 3031, and the nature and degree of cracking and checking, 4.4.5 shall be used to determine the deterioration of the material due to aging.

4.4.3 Unless otherwise specified in the detail specification, the specimen, mounted in the holder, shall be stretched to an elongation of 10 percent within 3 hours after it has been buffed. The specimen shall be held in the stretched position for 16 to 24 hours at a temperature of 38° ± 1°C (100° ± 2°F) to aid in the blooming of the protective waxes.

4.4.4 Within 1 hour after the preconditioning period, the stretched specimen mounted in the holder shall be placed in the aging container in such a position as to receive full radiation from the arc. It shall be exposed to the light until the total exposure is equivalent to that required to decompose the specified quantity of oxalic acid (4.4.1). At least one measurement of intensity of radiation shall be made, as described in 4.3, at the start and the end of each exposure and at intervals of not more than 24 hours during the period of exposure. The temperature of the air in the vicinity of the specimen shall be maintained at 45° ± 5°C (118° ± 9°F) during the exposure period, by controlling the temperature of the room and the ventilation of the space surrounding the specimen. The filters or other enclosure shall be cleaned at least once every 24 hours during the exposure period.

4.4.5 At the end of the exposure period, the holder with specimen shall be removed and the specimen examined immediately by means of binocular microscope for cracking and checking. The specimen shall be removed from the holder and set aside on a flat surface to rest for not less than 16 hours nor more than 96 hours at room temperature before physical tests are made.

4.4.6 At the end of the rest period, unless otherwise specified in the detail specification, 4.4.2, tensile strength and elongation shall also be determined of the specimen as described in methods 3021 and 3031. If other properties are required the specimen shall be tested as described in the specified method. The same physical tests shall be conducted on aged and unaged specimens for the purpose of comparison in determining the degree of deterioration of the aged material. The dimensions of the specimens for use in calculating the tensile strength and elongation shall be determined after exposure.

5. RESULTS

5.1 Calculation. The change in tensile strength, elongation or other characteristic of the insulation or sheath of the inspection unit due to aging shall be calculated as follows:

$$\text{Change in characteristic, percent} = \frac{O-E}{O} \times 100$$

O = the value obtained on the unaged insulation or sheath of the inspection unit.

E = the value obtained on the aged insulation or sheath of the inspection unit.

5.2 Unless otherwise specified in the detail specification, the number of specimens tested from each inspection unit shall be as required in the method of test, 4.4.2, used for determining the deterioration of the insulation or sheath.

5.3 The change in the characteristic of the insulation or sheath of the inspection unit shall be recorded to the nearest 1 percent.

5.4 Any cracking or checking of the material of the inspection unit shall be recorded.

5.5 The dosage and the elongation used for stretching of the specimen shall be recorded.

Method 4211.1
18 APRIL 2014

RESISTANCE TO PETROLATUM, VARNISHED CLOTH

1. SCOPE

1.1 This method is intended for use in determining the effect of hot petrolatum on varnished cloth and tapes of insulated wire and cable.

2. SPECIMEN

2.1 The specimen should be a piece of the varnished cloth or tape at least 12 inches in length taken from a single tape layer of the inspection unit.

3. APPARATUS

3.1 The apparatus shall be as follows:

3.1.1 A 200-milliliter beaker and cover glass.

3.1.2 An air oven equipped with an automatic temperature control capable of maintaining the specimen at the required temperature within ± 1°C (2°F).

3.1.3 Thermometer with scale to at least 160°C (320°F) and graduated to 0.5°C (1°F).

3.1.4 Petrolatum, approximately 100 ml.

4. PROCEDURE

4.1 At least 12 inches of each tape shall be removed from the inspection unit. Unless otherwise specified in the detail specification, 10 percent of the tapes but in no case less than 5 tapes shall be taken at random for test.

4.2 Unless otherwise specified in the detail specification, the temperature of exposure shall be 150° ± 1°C (302° ± 2°F) for a period of 15 ± 1 minute.

4.3 The 200-ml. beaker containing the petrolatum shall be heated to the required temperature. After the beaker and petroleum have reached the required temperature, the specimen shall be completely immersed in the petrolatum and allowed to remain for the required time. At the end of the exposure period the specimen shall be removed from the petrolatum and set aside to cool to the room temperature. The specimen shall then be freed of any petrolatum with a cloth and examined for softening, tackiness, or brittleness of the varnish.

5. RESULTS

5.1 Unless otherwise specified in the detail specification, one specimen from each layer of tape taken for test, 4.1, shall be tested.

5.2 The petrolatum resistance of the layer of tape shall be the result obtained from the specimen tested.

5.3 Any softness, tackiness, or brittleness of the varnish shall be recorded.

5.4 The temperature and time of exposure shall be recorded.

Method 4221.1
18 APRIL 2014

RESISTANCE TO OIL, INSULATION AND SHEATH

1. SCOPE

1.1 This method is intended for use in determining the effect of oil on oil-resisting insulation and sheath and sheath of insulated wire and cable. The procedure may be used for determining the resistance of insulation and sheath to oil at any desired temperature. The tensile strength, elongation, or other characteristic used for determining the degree of deterioration is determined immediately after exposure of the material.

2. SPECIMEN

2.1 The specimen should be as described in methods 3021 and 3031 or other methods of test required for determining the amount of deterioration, 4.2.

3. APPARATUS AND REAGENTS

3.1 The apparatus and reagents shall be as follows:

3.1.1 Glass tube having an outside diameter of 38 mm. and a length of approximately 300 mm. or other suitable container for immersing the specimen in oil.

3.1.2 Reflux condenser suitable for fitting into the glass tube by means of a cork stopper.

3.1.3 Equipment for controlling the temperature within ±1°C (2°F), such as a constant temperature liquid bath with thermostatic control.

3.1.4 Thermometer.

3.1.5 Aluminum or corrosion-resisting steel screens or glass frame-work to prevent the specimens from touching each other or the surfaces of the container.

3.1.6 Filter paper.

3.1.7 Acetone.

3.1.8 Immersion oil conforming to the following requirements:

Flash point - - - - - - - - - - - - - - - - - - 246° ± 5°C (475° ± 10°F)
Saybolt viscosity, sec - - - - - - - - - 100 ± 5
Aniline point - - - - - - - - - - - - - - - 93° ± 3°C (199° ± 5°F)

4. PROCEDURE

4.1 Unless otherwise specified in the detail specification, the test shall be carried out at a temperature of 121° ± 1°C (250° ± 2°F) for a period of 18 hours ± ¼ hour.

4.2 Unless otherwise specified in the detail specification, tensile strength and elongation tests, methods 3021 and 3031 shall be used to determine the deterioration of the insulation and sheath due to aging.

4.3 After adjusting the immersion oil to the required temperature, the specimen shall be completely immersed so that the liquid can circulate freely around the specimen during the period of exposure. The immersion container shall be fitted with a reflux condenser and the specimen exposed for the required time at the required temperature.

4.4 At the end of the immersion period the specimen shall be removed from the liquid, placed immediately in a fresh supply of the same liquid at room temperature, and allowed to remain for 35 ± 5 minutes.

4.5 At the end of the cooling period in the fresh liquid, the specimen shall be removed from the liquid, quickly dropped into acetone, and blotted lightly with filter paper. Unless otherwise specified in the detail specification, tensile strength and elongation shall be determined of the aged specimen as described in methods 3021 and 3031. If other properties are required the specimen shall be tested as described in the specified method. The same tests shall be conducted on aged and unaged specimens for the purpose of comparison in determining the degree of deterioration of the aged material.

4.6 The specimen shall be tested within 3 minutes after it has been removed from the cooling liquid. (See 4.4)

5. RESULTS

5.1 Calculation. The change in tensile strength, elongation, or other characteristic of the insulation or sheath of the inspection unit due to aging shall be calculated as follows:

$$\text{Change in characteristic, percent} = \frac{O-E}{O} \times 100$$

where:

O=the value obtained on the unaged insulation or sheath of the inspection unit.

E=the value obtained on the aged insulation or sheath of the inspection unit.

5.2 Unless otherwise specified in the detail specification, the number of specimens tested from each inspection unit shall be as required in the method of test, 4.2, used for determining the deterioration of the insulation or sheath.

5.3 The change in the characteristic of the insulation or sheath of the inspection unit shall be recorded to the nearest 1 percent.

5.4 The temperature and time of exposure shall be recorded.

Method 4223.1
18 APRIL 2014

RESISTANCE TO OIL, INSULATION AND SHEATH (RECOVERY METHOD)

1. SCOPE

1.1 This method is intended for use in determining the effect of oil on oil-resisting insulation and sheath of insulated wire and cable. The procedure may be used for determining the resistance of insulation and sheath to oil at any desired temperature. The tensile strength, elongation, or other characteristic used for determining the degree of deterioration is determined after the material has been permitted to recover for a definite period of time after exposure to the oil.

2. SPECIMEN

2.1 The specimen should be as described in method 4221.

3. APPARATUS AND REAGENTS

3.1 The apparatus and reagents shall be as described in method 4221.

4. PROCEDURE

4.1 Unless otherwise specified in the detail specification, the test shall be carried out at a temperature of 121° ± 1°C (250° ± 2°F) for a period of 18 ± ¼ hour.

4.2 Unless otherwise specified in the detail specification, tensile strength and elongation tests, method 3021 and 3031 respectively, shall be used to determine the deterioration of the insulation and sheath due to aging.

4.3 Unless otherwise specified in the detail specification, the specimen shall be permitted to recover 4 ½ ± ¼ hour in the air at room temperature after exposure to the oil before determining the tensile strength and elongation or other characteristics.

4.4 After adjusting the immersion oil to the required temperature, the specimen shall be completely immersed so that the liquid can circulate freely around the specimen during the period of exposure. The immersion container shall be fitted with a reflux condenser and the specimen exposed for the required time at the specified temperature.

4.5 At the end of the immersion period the specimen shall be removed from the liquid, placed immediately in a fresh supply of the same liquid at room temperature, and allowed to remain for 35 ± 5 minutes.

4.6 At the end of the cooling period in the fresh liquid the specimen shall be removed from the liquid, quickly dipped into acetone, and blotted lightly with filter paper. The specimen shall be suspended in air and allowed to recover for the required period of time (see 4.3) before tests are made.

4.7 At the end of the recovery period the width, thickness, and cross-sectional area of the specimen shall be determined as follows:

4.7.1 Thickness. The thickness of the specimen shall be determined as described in method 1124 except that a dumbbell tensile strength specimen shall be subjected to three measurements, one at the center and one near each end of the reduced section. If the specimen is narrower than the diameter of the foot, measurements shall be made with the center of the micrometer foot coinciding with the longitudinal center line of the specimen so that there will be an equal overlap of the foot on each side. The median of the three measurements shall be used as the thickness in calculating the cross-sectional area of the specimen except that specimens for which the difference between maximum and minimum thickness exceeds 0.003 inch shall be discarded.

4.7.2 Width. The width of the specimen shall be determined with the apparatus described in method 1018 or any device which is accurate to 0.0001 inch and which can be used in such a manner that compression of the specimen is negligible. A dumbbell tensile strength specimen shall be measured at three places, one at the center and one near each end of the reduced section. The median of the three measurements shall be used as the width in calculating the cross-sectional area of the specimen.

4.7.3 Cross-sectional area. The cross-sectional area shall be calculated or determined as described in method 3021.

4.8 Unless otherwise specified in the detail specification, tensile strength and elongation shall be determined on the aged specimen as described in methods 3021 and 3031 respectively. If other properties are required, the specimen shall be tested as described in the specified method. The same tests shall be conducted on aged and unaged specimens for the purpose of comparison in determining the degree of deterioration of the aged material.

5. RESULTS

5.1 Calculation. The change in tensile strength, elongation, or other characteristic of the insulation or sheath of the inspection unit due to aging shall be calculated as follows:

$$\text{Change in characteristic, percent} = \frac{O-E}{O} \times 100$$

where:

O=the value obtained on the unaged insulation or sheath of the inspection unit

E=the value obtained on the aged insulation or sheath of the inspection unit

5.2 Unless otherwise specified in the detail specification, the number of specimens tested from each inspection unit shall be as required in the method of test, 4.2, used for determining the deterioration of the insulation or sheath.

5.3 The change in the characteristic of the insulation or sheath of the inspection unit shall be recorded to the nearest 1 percent.

5.4 The temperature and time of exposure and time of recovery shall be recorded.

Section 5000

THERMAL TESTS

Method 5011.1
18 APRIL 2014

HEAT SHOCK, INSULATION

1. SCOPE

1.1 This method is intended for use in determining the effect of heat on insulating materials in the bent form. It is primarily applicable to thermoplastic insulation. It is applicable to single conductor insulated wire or cable.

2. SPECIMEN

2.1 The specimen should consist of a piece of the inspection unit of sufficient length to be tested as described in section 4, from which any covering over the insulation has been removed.

3. APPARATUS

3.1 The apparatus shall be as follows:

3.1.1 A mandrel of the size required in column 3 of table I.

3.1.2 A circulating air oven capable of maintaining the specimen at the required temperature within ±1°C (2°F).

TABLE I

Size of conductor AWG or circular mils	Number of adjacent turns	Mandrel size, equals the nominal outside diameter of the insulated wire multiplied by the following factor
No. 8 and smaller	6	1
No. 7 to No. 2, inclusive	6	2
No. 1	1	2
No. 0 to 0000	180° bend	2
225,000 circular mils and over	180° bend	5

4. PROCEDURE

4.1 Unless otherwise specified in the detail specification, the specimen shall be subjected to a temperature of 121° ± 1°C (250° ± 2°F) for a period of 1 hour.

4.2 The specimen shall be wound around the mandrel (if size 1 AWG or smaller) or given a 180° bend around a mandrel (if size 0 or larger) as specified in table I. While in the wound or bent condition, the specimen shall be exposed to circulating air at the required temperature for the required period of time. At the end of the exposure period, the specimen shall be examined for cracking of the insulation both on internal and external surfaces by axially splitting the specimen at two axes 180° apart and carefully removing the semi-tubes from the connector.

4.3 Flat twin cable shall be bent on the minor axis of its cross section only. The minor diameter shall be used in determining the size of the mandrel.

5. RESULTS

5.1 Unless otherwise specified in the detail specification, two specimens from each inspection unit shall be tested.

5.2 Any cracks in the insulation on the internal and external surfaces of the specimen shall be recorded.

5.3 The resistance to heat shock of the insulation of the inspection unit shall be the results obtained from the specimens tested.

5.4 The temperature, time of exposure, and size of mandrel used shall be recorded.

Method 5021.1
18 APRIL 2014

HEAT DISTORTION, INSULATION

1. SCOPE

1.1 This method is intended for use in determining the distortion of insulating materials. It is particularly applicable to thermoplastic insulation.

2. SPECIMEN

2.1 Conductors No. 0000 AWG and smaller. The specimen should consist of a right cross section of the inspection unit 1 inch in length from which any covering over the insulation has been removed.

2.2 Conductors larger than No. 0000 AWG. The specimen should consist of a piece of the insulation 1 inch in length and 9/16 ± 1/16 inch in width taken from the inspection unit and buffed, method 3011, to 0.050 ± 0.010 inch in thickness.

3. APPARATUS

3.1 The apparatus shall be as follows:

3.1.1 A dial micrometer with a flat anvil not less than 0.375 inch in diameter and a flat presser foot 0.375 ± 0.01 inch in diameter. The presser foot shall be equipped to support added weights, table I, for applying force to the specimen. The surfaces of the anvil and presser foot shall be parallel to within 0.0001 inch. The micrometer shall be graduated to read in mils or 0.0001 inch.

3.1.2 Weights as required in table I.

TABLE I. Gage loads

Conductor size (AWG)	Load on gage (grams)
No. 18 -	300
No. 16 -	400
Nos. 15 to 8, inclusive - - - - - - - - - - - -	500
Nos. 7 to 1, inclusive - - - - - - - - - - - - -	750
Nos. 0 to 0000, inclusive - - - - - - - - - -	1,000
Nos. larger than 0000 - - - - - - - - - - - -	2,000

3.1.3 A circulating air oven capable of maintaining the specimen at the required temperature within ± 1°C (2°F).

4. PROCEDURE

4.1 Unless otherwise specified in the detail specification, the specimen shall be subjected to a temperature of 121° ± 1°C (250° ± 2°F) for a period of 1 hour under the weight required in table I.

4.2 Conductors size 0000 AWG or smaller.

4.2.1 The thickness of the insulation shall be determined as described in method 1011 and the value recorded as T_1.

4.2.2 The oven shall be heated to the required temperature and maintained throughout the test. The thickness gage, 3.1.1, the weight required in table I, and the specimen shall be placed in the oven and allowed to remain for a period of 1 hour.

4.2.3 At the end of the pre-heating period, the specimen shall be placed directly under the foot of the gage and the weight applied to the gage. The gage with specimen in position shall remain in the oven for the required time. At the end of the heating period, the diameter of the specimen shall be read from the gage and recorded as D_1.

4.2.4 The insulation shall be removed from the conductor and the diameter of the conductor of the specimen determined as described in method 1431 and the value recorded as D_2.

4.3 Conductors larger than size 0000 AWG.

4.3.1 The thickness (diameter) of the specimen shall be determined with the gage described in 3.1.1 with no added load on the presser foot, and the value recorded as T_3.

4.3.2 The oven shall be heated to the specified temperature and maintained throughout the test. The thickness gage, 3.1.1, the weight required in table I, and the specimen shall be placed in the oven and allowed to remain for a period of 1 hour.

4.3.3 At the end of the pre-heating period, the specimen shall be placed directly under the foot of the gage and the weight applied to the gage. The gage with specimen in position shall remain in the oven for the required time. At the end of the heating period, the thickness of the specimen shall be read from the gage and the value recorded as T_4.

5. RESULTS

5.1 Calculation. The distortion of the insulation of the specimen shall be calculated as follows:

5.1.1 Conductor sizes 0000 AWG and smaller.

$$T_2 = \frac{D_1 - D_2}{2}$$

where:
T_2=the thickness of insulation after heat distortion, inch

D_1=the diameter of the specimen after heating, inch

D_2=the diameter of the conductor from the specimen, inch.

$$\text{Change in thickness of insulation, percent} = \frac{T_1 - T_2}{T_1} \times 100$$

where:
T_1=the thickness of the insulation of the specimen before heat treatment, inch

5.1.2 Conductors larger than 0000 AWG.

$$\text{Change in thickness of insulation, percent} = \frac{T_3 - T_4}{T_3} \times 100$$

where:

T_3=the thickness of the specimen before heat treatment, inch

T_4=the thickness of the specimen after heat treatment, inch

5.2 Unless otherwise specified in the detail specification, two specimens from each inspection unit shall be tested.

5.3 The distortion of the insulation of the inspection unit shall be the average of the results obtained from the specimens tested.

5.4 The distortion of the insulation of the inspection unit shall be recorded to the nearest 1 percent.

5.5 The temperature and time of exposure shall be recorded.

Method 5031.1
18 APRIL 2014

HIGH TEMPERATURE

1. SCOPE:

1.1 This method is intended for use in determining the effect of heat on insulating materials.

2. SPECIMEN:

2.1 The specimen shall consist of a 24 inch sample. One inch of insulation shall be removed from each end to the bare conductor or conductors.

3. APPARTUS

3.1 Mandrel (5 times ±.50 overall maximum diameter of wire or cable to be tested).

3.2 Weights (see table I).

3.3 Instrument capable of measuring ±1% diameter of wire or cable.

4. PROCEDURE

4.1 Select the proper weight as shown in table I for the applicable size of cable or wire. The weight shall be attached to the exposed conductor at each end. The specimen on the mandrel with the weights freely suspended shall be placed in a circulating air oven maintained at the rated temperature of the wire or cable for a period of 120 hours. The weight shall be removed from the specimen when the specimen has been allowed to cool to room temperature. The bent portion of the specimen shall then be bent not less than 180˚ bend in 30 seconds.

TABLE I. Diameter undersheath and weight.

Diameter under sheath (in.)	Weight (pounds)
0.325 and less	2
0.326 to 0.430	2
0.431 to 0.540	2
0.541 to 0.640	3
0.641 to 0.740	3
0.741 to 0.850	3
0.851 to 1.100	6
1.101 to 1.320	6
1.321 to 1.550	6
1.551 to 1.820	6

5. RESULTS

5.1 Unless otherwise specified in the detail specification, one specimen from each end of the inspection unit shall be tested.

5.2 The specimen shall then be subjected to the dielectric test. Following a dielectric test and within 24 hours, the specimen shall be subjected to the abrasion tests. There shall be no evidence of failure.

5.3 The weight, maximum diameter of the cable or wire, and mandrel diameter shall be recorded.

Method 5111.1
18 APRIL 2014

MELT, FIBROUS COVERING

1. SCOPE

1.1 This method is intended for use in determining the softening of the saturants and finishing materials in the fibrous covering of insulated wire and cable.

2. SPECIMEN

2.1 The specimen shall be a 6-inch length of the inspection unit from which any covering over the fibrous covering has been removed.

3. APPARATUS

3.1 The apparatus shall be as follows:

3.1.1 A circulating air oven capable of maintaining the specimen at the required temperature within ±1°C (2°F).

3.1.2 Means for suspending the specimen horizontally in the oven.

4. PROCEDURE

4.1 Unless otherwise specified in the detail specification, the specimen shall be subjected to a temperature of 65° ± 1°C (149° ± 2°F) for a period of 30 minutes.

4.2 The specimen shall be wrapped, except for a distance of 1 inch at each end with a piece of clean, white, glazed paper. The wrapped specimen shall be supported horizontally by the bare ends of the conductor in the oven which has been pre-heated to the required temperature. The specimen shall be heated for the required time at the required temperature, removed from the oven, and allowed to cool to room temperature. The specimen shall be examined to determine whether the paper adheres to the specimen or whether the saturants or finishing materials have become sufficiently fluid to be transferred to the paper in sufficient quantity to form a ridge on the paper which is perceptible to the touch.

5. RESULTS

5.1 Unless otherwise specified in the detail specification, two specimens from each inspection unit shall be tested.

5.2 The resistance to melting of the saturants or finishing materials of the fibrous covering of the inspection unit shall be the results obtained from the specimens tested.

5.3 Whether the paper adhered to the inspection unit shall be recorded.

5.4 Whether the saturants or finishing materials transferred to the paper from the inspection unit shall be recorded.

5.5 The temperature and time of exposure shall be recorded.

Method 5131.1
18 APRIL 2014

DRIP, FIBROUS COVERING

1. SCOPE

1.1 This method is intended for use in determining the softening of the finish in the fibrous covering of insulated wire or cable and its tendency to soften sufficiently to run from the cable. The temperature is higher than that used for the melt test.

2. SPECIMEN

2.1 The specimen should be a 6-inch length of the inspection unit from which any covering over the fibrous covering has been removed.

3. APPARATUS

3.1 The apparatus shall be as follows:

3.1.1 A circulating air oven capable of maintaining the specimen at the required temperature within ±1°C (2°F).

3.1.2 Means shall be provided for suspending the specimen at an angle of 45°.

3.1.3 A sheet of paper or container for collecting any drippings from the specimen.

4. PROCEDURE

4.1 Unless otherwise specified in the detail specification, the specimen shall be subjected to a temperature of 82° ± 1°C (180° ± 2°F).

4.2 All covering and the insulation shall be removed from the conductor of the specimen for a distance of ¾ inch from each end. The specimen shall be suspended by the bare ends of the conductor at an angle of 45° in the oven which has been pre-heated to the required temperature. A sheet of paper or container shall be placed in the bottom of the oven in a position to collect any dripping from the specimen. The specimen shall be heated for the required time and at the required temperature. At the end of the exposure period the specimen shall be examined for dripping, formation of globules on the lower side, or bubbles upon the surface.

5. RESULTS

5.1 Unless otherwise specified in the detail specification, two specimens from each inspection unit shall be tested.

5.2 The resistance to dripping of the fibrous covering of the inspection unit shall be the results obtained from the specimens tested.

5.3 Any dripping, formation of globules on the lower side, or bubbles upon the surface of the inspection unit shall be recorded.

5.4 The temperature and time of exposure shall be recorded.

Method 5141.1
18 APRIL 2014

DRIP, CABLE

1. SCOPE

1.1 This method is intended for use in determining the ability of saturants and finishing materials in cable to resist flow at elevated temperatures when the cable is in a vertical position.

2. SPECIMEN

2.1 The specimen should be a piece of the inspection unit not less than 30 times the over-all diameter of the cable.

3. APPARATUS

3.1 The apparatus shall be as follows:

3.1.1 A circulating air oven of sufficient size to accommodate the specimen in a vertical position and capable of maintaining the specimen at the required temperature within ± 1°C (2°F).

3.1.2 Means for supporting the specimen in a vertical position.

3.1.3 A sheet of paper or a container for collecting any drippings from the specimen.

4. PROCEDURE

4.1 Unless otherwise specified in the detail specification, the specimen shall be subjected to a temperature of 80° ± 1°C (176° ± 2°F) for a period of 1 hour.

4.2 All covering and insulation shall be removed from one end of the conductor of the specimen for a distance of approximately ¾ inch. The specimen shall be supported vertically by the bare end of the conductor in the oven which has been preheated to the required temperature. A sheet of white paper or any suitable container shall be placed beneath the specimen in such a position that it will catch any material which drips from the specimen. The specimen shall be heated for the required time and at the required temperature. At the end of the exposure period, the lower end of the specimen shall be examined for globules of the saturants or finishing materials and bubbles on the surface. The paper or container shall be examined for any drippings.

5. RESULTS

5.1 Unless otherwise specified in the detail specification, specimens from each inspection unit shall be tested.

5.2 The resistance to dripping of the fibrous covering of the inspection unit shall be the results obtained from the specimens tested.

5.3 Any exudation, formation of bubbles on the inspection unit, or drippings on the paper shall be recorded.

5.4 The time and temperature of exposure shall be recorded.

Method 5211.1
18 APRIL 2014

FLAMMABILITY, HORIZONTAL

1. SCOPE

1.1 This method is intended for use in determining the flame-retardant properties of insulated wire and cable without metallic coverings. It is particularly applicable to the flame-retardant fibrous covering of varnished cloth insulated wire and cable.

2. SPECIMEN

2.1 The specimen should be a piece of the inspection unit at least 10 inches in length.

3. APPARATUS

3.1 The apparatus shall be as follows:

3.1.1 Test chamber approximately 12 inches wide, 14 inches deep, and 24 inches high made of sheet metal. The chamber shall be open at the top and front and equipped with supports 8 inches apart for holding the specimen in a horizontal position during the test.

3.1.2 Tirrell burner having a bore of 3/8 inch and a 4-inch length above the primary air inlets.

3.1.3 Supply of fuel gas, butane, or equivalent. The gas system shall be equipped with controls for maintaining the flow of gas to the burner at uniform pressure.

3.1.4 Watch or other device which will register the time in seconds.

3.1.5 Steel scale graduated to 1/8 inch or finer or its decimal equivalent.

4. PROCEDURE

4.1 The specimen shall be free from mechanical damage. The flammability test shall be carried out in a room free from draft or under a hood in which the flow of air is not sufficient to affect the flame.

4.2 The specimen shall be placed in a horizontal position in the chamber on supports 8 inches apart. Two strips of indicator paper shall be attached to the specimen 4 inches apart, each paper being 2 inches from the point on the specimen where the inner blue cone of the flame is to be applied. The indicator paper shall be moistened just sufficient for proper adhesion and wrapped once around the specimen with the gummed side towards the wire and the ends pasted evenly together and projected ¾ inch from the specimen on the opposite side to which the flame is to be applied. The Tirrell burner shall be placed in a vertical position and the flame adjusted to 5 inches in height with the inner blue cone 1 ½ inches in height.

4.3 The burner, in a vertical position, shall be placed so that the inner cone just touches the under side of the specimen at a point midway between the two indicator papers. The flame shall be directed against the specimen for exactly 30 seconds and then removed. After flaming of the specimen has ceased, the indicator papers shall be examined to determine the maximum distance the flame extended in either direction from the center point of application of the flame.

5. RESULTS

5.1 Unless otherwise specified in the detail specification, one specimen from each inspection unit shall be tested.

5.2 The flammability of the fibrous covering of the insulation or sheath of the inspection unit shall be the result obtained from the specimen tested.

5.2.1 When more than one specimen is tested, the flammability of the fibrous covering of the inspection unit shall be the average of the results obtained from the specimens tested.

5.3 The flammability (maximum distance the specimen burned in either direction from the center point of application of the flame) of the inspection unit shall be recorded to the nearest 1/8 inch.

Method 5221.1
18 APRIL 2014

FLAMMABILITY, VERTICAL

1. SCOPE

1.1 This method is intended for use in determining the flame-resistant properties of fibrous coverings, other than tapes, of insulated wire and cable without metallic coverings. It is also applicable to the determination of the flame-retardant properties of plastic insulation and jackets.

2. SPECIMEN

2.1 The specimen should be a piece of the inspection unit approximately 18 inches in length from which any covering over the covering to be tested has been removed.

3. APPARATUS

3.1 The apparatus shall be as follows:

3.1.1 Test chamber approximately 12 inches wide, 14 inches deep, and 24 inches high made of metal sheet. The chamber shall be open at the top and front and equipped with supports for holding the specimen in a vertical position and keeping it taut during the test.

3.1.2 Supply of fuel gas, butane, or equivalent. The gas system shall be equipped with controls for maintaining the flow of gas to the burner at a uniform pressure.

3.1.3 A steel scale graduated to 1/32 inch or finer or its decimal equivalent.

3.1.4 Watch or other timing device which will register the time in seconds.

3.1.5 A Tirrell burner having a bore of 3/8 inch and 4-inch length above the primary air inlets. The burner shall have an attached pilot light and shall be mounted on a 20° angle block in the heating chamber.

3.1.6 An adjustable steel angle (jig) attached to the bottom of the chamber to insure the correct location of the burner with relation to the specimen.

3.1.7 Flame indicators consisting of stripe of gummed kraft paper, 5 mils in nominal thickness and ½ inch in width.

4. PROCEDURE

4.1 The flammability test shall be carried out in a room free from draft or under a hood in which the flow of air is not sufficient to affect the flame. The specimen shall be free from mechanical damage.

4.2 One end of the specimen shall be fastened in the chamber by means of a clamp. The flame indicator paper shall be attached to the specimen 10 inches above the point where the inner blue cone of the flame is to be applied. The indicator paper shall be moistened just sufficient for proper adhesion and wrapped once around the specimen with the gummed side toward the specimen and the ends pasted evenly together and projected ¾ inch from the specimen on the side opposite to where the flame is to be applied.

4.3 The burner shall be adjusted to produce a flame 5 inches high and an inner blue cone 1.5 inches high. The burner mounted on the 20° angle block shall be placed against the jig in front of the specimen so that the vertical plane through the stem of the burner passes through the axis of the specimen. The jig shall be adjusted so that there is a distance of 1.5 inches between the tip of the burner stem and the surface of the specimen, as measured along the axis of the burner stem. The height of the specimen shall be adjusted so that the point of contact with the flame shall be not less than 3 inches from the lower end of the specimen.

4.4 The pilot of the burner shall be lighted. The valve supplying the fuel gas to the burner shall be opened and the flame automatically applied to the specimen for 15 seconds and then the valve closed for 15 seconds. This operation shall be repeated 4 additional times.

4.5 At the end of the fifth application of the flame the percent of the extended portion of the indicator paper which is burned shall be estimated and recorded. The duration of the burning period of the specimen after the fifth application of the flame shall be observed and the valve recorded.

5. RESULTS

5.1 Unless otherwise specified in the detail specification, one specimen from each inspection unit shall be tested.

5.2 The flammability of the fibrous covering, insulation, or sheath of the inspection unit shall be the result obtained from the specimen tested.

5.2.1 When more than one specimen is tested, the flammability of the fibrous covering of the insulation or sheath of the inspection unit shall be the average of the results obtained from the specimens tested.

5.3 The duration of the burning of the inspection unit after final application of the flame shall be recorded to the nearest second.

5.4 The amount of the extended portion of the indicator paper that burned from the inspection unit shall be recorded to the nearest 5 percent.

Method 5231.1
18 APRIL 2014

FLAMMABILITY, SPARK METHOD

1. SCOPE

1.1 This method is intended for use in determining the flammability of flame-proof, heat- and flame-resistant, and oil-proof wires and cables both with and without armor. It is particularly applicable to wires and cables for use on shipboard.

2. SPECIMEN

2.1 The specimen should consist of a piece of the inspection unit approximately 18 inches in length.

3. APPARATUS

3.1 The apparatus shall be as follows:

3.1.1 Test chamber which shall be of sufficient size to contain the specimen, specimen support, heater coil, spark plugs, flame travel gage, and other accessories. It shall be constructed so as to eliminate air drafts and to permit a clear view of the interior through shatter-proof glass windows. Vent holes shall be provided around the sides adjacent to the base to permit the admission of fresh air. An exhaust fan shall be connected to the top of a capacity just sufficient to carry off smoke and gases.

3.1.2 The support shall be suitable for holding the specimen in a vertical position with an unsupported span of not less than 14 inches.

3.1.3 Heater coils consisting of 7 turns of No. 10 (0.102-inch diameter) resistance wire, space wound 0.25 inch per turn. The nominal inside diameter of the coil shall be 0.5 inch greater than the overall diameter of the specimen to be tested. The lower end of the coil shall be located 1.5 inches above the top of the lower specimen support. The resistance wire shall meet the requirements of ASTM B344.

3.1.4 Two spark plugs with extended electrodes spaced 1/8 inch from the surface of the specimen shall be located on diametrically opposite sides of the specimen and shall be placed with their longitudinal centerlines in a horizontal plane ½ inch above the top of the heater coil in such a position as to ignite any gases emitted from the heated specimen. A suitable electric circuit shall be provided to maintain continuous sparking at electrodes during the test. The plugs shall be mounted in such a manner that they may be moved away from the specimen after ignition takes place so as not to interfere with the travel of the flame and to prevent the electrodes from becoming fouled.

3.1.5 A suitable flame travel gage for judging the distance of flame travel shall be mounted near the specimen and in such a position as not to interfere with the travel of flame.

3.1.6 A constant current as required in table I shall be supplied from a suitable transformer source to the heater coil.

TABLE I. Current in heater coil

Nominal diameter of specimen (inches)	Current amperes a. c. (r. m. s.)
0.1	46
.2	47
.3	48
.4	49
.5	50
.6	51
.7	52
.8	53
.9	54
1.0	55
1.1 to 1.3	56
1.4 to 1.7	57
1.8 to 2.2	58
2.3 to 2.9	59

3.1.7 Watch or other timing device which will register the time in seconds.

4. PROCEDURE

4.1 Time of heating.

4.1.1 Unless otherwise specified in the detail specification, for all armored cables, whether tested with or without armor, the current in the heating coil shall be turned off 30 second after ignition occurs.

4.1.2 Unless otherwise specified in the detail specification, for all unarmored cables, where the ignition time is less than 60 seconds, the current in the heating coil shall be turned off 60 seconds after being turned on.

4.1.3 Unless otherwise specified in the detail specification, for all unarmored cables, where the ignition time is greater than 60 seconds, the current in the heating coil shall be turned off when ignition occurs.

4.2 The lower end of the specimen shall be wrapped with varnished cambric or similar material in such a manner that any gases released through this end shall be diverted toward the spark plugs.

4.3 Time of ignition. The specimen shall be centered in the heater coil. The spark plugs and flame gage shall be placed in position and the chamber shall be closed and the ventilating fan started. The watch or timing device shall be started simultaneously with the energizing of the heater coil by the current as specified in table I and the energizing of the spark plugs. Ignition shall be considered as occurring when the flame transfers from the escaping gases to the surface of the specimen and continues there. Flashes which may occur in the gaseous space prior to obtaining a sustained flame shall be disregarded. The time from the starting of the current until ignition shall be recorded as the ignition time.

4.4 Distance of flame travel. Immediately after ignition has occurred, 4.3, the electrical supply to the spark plugs shall be turned off and the plugs shifted away from the flame. The maximum distance which the flame travels along the surface of the specimen before extinction shall be measured from the top of the heater coil and recorded as the distance which the flame travels.

4.5 Time required for self-extinction. The time, in seconds, that the specimen continues to burn after the current is cut off in the heater coil until the cessation of all flaming shall be recorded as the time of self-extinction.

5. RESULTS

5.1 One specimen from each inspection unit shall be tested.

5.1.1 The flammability of the inspection unit shall be the results obtained from the specimen tested.

5.2 If the results from one specimen fail to meet the specified requirements, four additional specimens shall be tested.

5.2.1 The flammability of the inspection unit shall be the average of the results obtained from the five specimens tested.

5.3 The time required for the ignition of the inspection unit shall be recorded to the nearest second.

5.4 The time required for self-extinction of the inspection unit shall be recorded to the nearest second.

5.5 The distance the flame travels along the inspection unit shall be recorded to the nearest 1/8 inch.

5.6 The time of heating shall be recorded.

Section 6000

ELECTRICAL TESTS

Method 6011.1
18 APRIL 2014

RESISTANCE, ELECTRICAL, STEEL ARMOR

1. SCOPE

1.1 This method is intended for use in determining the electrical resistance of steel armor of wire and cable.

2. SPECIMEN

2.1 The specimen should be a piece of the inspection unit at least 10 feet in length from which any covering over the armor has been removed.

3. APPARATUS

3.1 The apparatus shall be as described in method 6021.

4. PROCEDURE

4.1 If a Wheatstone bridge is used, the resistance of the leads connecting the bridge to the specimen shall be obtained with the leads short-circuited on themselves and the results subtracted from the measured resistance of the specimen.

4.1.1 If the tests are conducted with a Kelvin double bridge, both current and potential leads shall be used. The current leads shall be attached in such manner as to give assured contact with a cleaned surface of the specimen. The potential leads should be attached by encircling clamps on the bared armor or to a binding of fine copper wire wrapped tightly for several turns about the bared armor.

4.1.2 The test shall be made by a method using both current and potential leads if the resistance is less than 1 ohm. Where potential leads are used, the distance between each lead and the corresponding current lead shall be at least three times the diameter over the armor.

4.2 The length of the specimen shall be measured to an accuracy of 0.2 percent by means of the steel scale and the value recorded as L.

4.3 The specimen between potential conductors shall be connected to the testing instrument as described in 4.1.1. The specimen shall not be tested while it is under tension. It may be laid flat and straight on a clean dry surface of material having low conductivity, such as paper, wood, stone, or cement. The laboratory temperature should be as near as practicable to 20°C (68°F). If a laboratory with temperature controlled at 20°C is not available, the specimen may be tested at room temperature. The specimen shall be allowed to condition for at least 2 hours before testing. It shall then be maintained at the required potential for a period of 1 minute and then the resistance measured and the value recorded in ohms as R. At this point the temperature of the surrounding medium shall be recorded as T.

5. RESULTS

5.1 Calculation.

5.1.1 The resistance of the armor per 100 feet shall be calculated as follows:

$$\text{Resistance, ohms per 100 feet} = \frac{R}{L} \times 100$$

where:
R = the resistance of the specimen between leads at test temperature, ohms.
L = the length of the specimen between leads, feet.

5.1.2 Resistance measurements made at temperatures other than 20°C shall be corrected to 20°C as follows:

$$\text{Resistance at 20°C., ohms} = \frac{R}{1+0.00393\,N\,(T-20)}$$

where:

R = the resistance of the specimen at test temperature, ohms
T = the temperature of test, °C.
*N=the temperature coefficient of resistance of the armor metal relative to soft copper
*When N is not known, the test shall be conducted at 20°C.

5.2 Unless otherwise specified in the detail specification, one specimen from each inspection unit shall be tested.

5.3 The resistance of the armor of the inspection unit shall be the results obtained from the specimen tested.

5.3.1 When more than one specimen is tested from each inspection unit, the resistance of the armor shall be the average of the results obtained from the specimen tested.

5.4 The resistance of the armor of the inspection unit in ohms per 100 feet shall be recorded to the nearest 1 percent.

Method 6021.1
18 APRIL 2014

RESISTANCE, ELECTRICAL, CONDUCTOR

1. SCOPE

1.1 This method is intended for use in determining the electrical resistance of solid and stranded conductors.

2. SPECIMEN

2.1 The specimen shall be free of splices, surface cracks, or other visible defects and shall be at least 36 inches in length.

3. APPARATUS

3.1 Resistance shall be measured with a Kelvin bridge, or a suitable four-terminal test method alternate if the resistance is below one ohm. Measurement accuracy shall be within 0.1 percent of reading:

3.2 Resistance may be measured with a Wheatstone bridge, or a suitable alternate if the resistance is above one ohm. Measurement accuracy shall be within one percent of reading.

3.3 Temperature measuring equipment shall be used that will determine the temperature of the conductor to within ±0.5˚C (0.9 ˚F).

3.4 A rule shall be used to measure the length of the specimen to an accuracy of ± 0.2 percent.

4. PROCEDURE

4.1 If a Wheatstone bridge is used, the resistance of the leads connecting the bridge to the specimen shall be obtained with the leads short-circuited on themselves and the result subtracted from the measured resistance of the specimen.

4.2 If a Kelvin bridge is used, separate current and potential leads shall be used. The current leads shall be attached in such a manner as to give assured contact with all the strands of the conductor. The potential lead clamps shall be such as to encircle the conductor and of small enough width so that the tested length can be assured within the ±0.2 percent accuracy. The distance between the current and potential lead contact shall be greater than three times the diameter of the specimen.

4.3 The test specimen should be allowed to come to the same temperature as the surrounding medium to ensure a correct reading.

4.4 In all resistance measurements, the measuring current raises the temperature of the conductor. Therefore, care should be taken to keep the magnitude of current low, and the time of its use short enough so that the change in resistance cannot be detected.

4.5 To eliminate errors due to contact potential, two readings, one direct and one with current reversed, may be taken in direct succession and the results averaged.

4.6 The resistance shall be measured and recorded, then converted to ohms per unit length. The temperature, conductor length, and conductor size shall be measured and recorded.

5. Temperature correction.

5.1 When the measurement is made at any other than a reference temperature, the resistance may be corrected for moderate temperature difference to what it would be at the reference temperature as follows:

$$\text{Resistance}_T = \frac{R_t}{1 + \alpha_T(t-T)}$$

where:
R_T=Resistance at reference temperature, T.
R_t=Resistance as measured at temperature, t.
A_T=Known or given temperature coefficient of resistance of the specimen being measured at reference temperature, T.
T=Reference temperature
t=Temperature at which measurement is made.

NOTE: The parameter αT, in the above equation, varies with conductivity and temperature.. For copper of 100 percent conductivity and a reference temperature of 20˚C, its value 0.00393. Values at other conductivities and temperatures will be found in NBD Handbook 100 of the National Bureau of Standards. Table 2 lists temperature coefficients for the common electrical conductor materials.

6.0 Report.

6.1 The report shall include:

6.2 Specimen length.

6.3 Conductor size.

6.4 Resistance measured.

6.5 Test temperature.

6.6 Correction calculation (if applicable).

6.7 Method of measurement.

6.8 Calculation to appropriate unit length resistance.

Method 6031.1
18 APRIL 2014

RESISTANCE, ELECTRICAL, INSULATION

1. SCOPE

1.1 This method is intended for use in determining the insulation resistance of insulated wire and cable. The test should be conducted after the voltage withstand test, method 6111. The insulation resistance test should be conducted under the supervision of the inspector in the plane of the manufacturer of the wire and cable.

2. SPECIMEN

2.1 The specimen should consist of one or more coils or reels of finished insulated wire or cable or an equal length of insulated wire or cable taken after the vulcanization process but before the braiding or finishing operation.

3. APPARATUS

3.1 The apparatus shall be as follows:

3.1.1 A suitable container, equipped with stirrer, in which the specimen may be immersed in water.

3.1.2 A standard resistance, scale, and shunts of any suitable pattern.

3.1.3 A DC. voltage source preferably a battery of dry cells, that will supply a voltage of not less than that specified in the detail specification or specification sheet.

3.1.4 A suitable instrument for measuring the resistance that will give an accuracy of within 10 percent and a sensitivity of 1 percent of full scale deflection.

3.1.4.1 A galvanometer of fairly high sensitivity and having the following qualifications has been found to meet the accuracy required. The galvanometer constant shall be not less than 50,000. The means for indicating the deflection shall produce a sharply outlined indication on the scale, and the deflection shall be not less than 100 divisions (measured from zero) when the variable shunt has been set to determine the constant of the galvanometer. The resistance of the shunts and the calibrating resistor shall be checked from time to time.

3.1.4.2 Any other suitable equipment arranged to apply a voltage of not less than that specified in the detail specification or specification sheet.

3.1.5 Any apparatus that will measure the length of the specimen to an accuracy of 0.2 percent.

4. PROCEDURE

4.1 Unless otherwise specified in the detail specification or specification sheet, the insulation resistance shall be determined on the same specimen used for determining the voltage withstand method 6111. It is desirable that the test be conducted immediately following the voltage withstand test. In any case the specimen shall be grounded and completely discharged before the measurement of insulation resistance is made.

4.2 Unless otherwise specified in the detail specification or specification sheets, the insulation resistance shall be measured 1 minute after the circuit is closed.

4.3 The test voltage shall be as specified in the detail specification or specification sheet.

4.4 The insulation resistance test may be made before the braiding or finishing operation during manufacture, but not before any vulcanizing process. Single conductor cable shall be tested between the conductor and water in which it is immersed. Lead covered single conductor cable shall be tested prior to application of the lead sheath. Individual conductors of a multiple conductor cable shall be tested before assembly as described for single conductor cable. After assembly, the multiple-conductor cable shall be tested between a single conductor against all other conductors arranged in two or more groups for testing; these tests may be conducted without immersion or with immersion using the water as a ground. After covering, a lead-covered cable shall be tested between each conductor and the lead sheath, or between each conductor and its contiguous conductors and to the sheath, without immersion.

4.5 The specimen shall be immersed in water for a period of at least 1 hours before application of the potential. Unless otherwise specified in the detail specification or specification sheet, tap water will be used. The water in which the specimen is tested while immersed, as well as the lead covered and multiple conductor cable, shall be at a temperature between 10° and 27°C for at least 30 minutes before the test. The ends of the specimen shall be kept well above the surface of the water and the covering removed from the surface of the insulation for several inches at each end in order to reduce surface leakage. The ends of the specimen shall be dipped into melted paraffin or other satisfactory material to minimize the effect of moisture in reducing insulation resistance between the covering and conductor. The water in the bath shall be stirred well to maintain a uniform temperature throughout the bath during the test. The specimen shall be assembled in the test circuit as described in 4.6.

4.6 The test instruments shall be mounted so that they will be reasonably free from vibration and will not be affected adversely by local conditions. A typical test circuit, as shown on figure 6031, shall consist of a grounded galvanometer with Ayrton shunt in series with a suitable switch, a known resistance, and a battery with the negative terminal connected to one end of the conductor of the specimen. The circuit shall be completed through the water electrode or metallic sheath which shall be grounded.

4.7 The galvanometer constant K shall be determined with the battery lead C connected to ground at A. The galvanometer shunt constant is defined as the value of resistance required in series with the galvanometer to produce a galvanometer scale deflection of one scale division, either with no shunt or for shunt constant equal to unity and the value of voltage equal to that required in 4.3. (In paragraphs 4.8 and 5 the constants *S* and *s* for shunt tap settings are assumed to be the ratio of the tapped resistance to the total resistance of the shunt (Ayrton type) normally connected across the galvanometer terminal.)

4.8 To allow for any leakage current to ground from the battery, instruments, and all connections, the galvanometer deflection and corresponding shunt constant s shall be recorded with the connection between the battery lead C and either the specimen or ground open. The galvanometer deflection and shunt constant S, for the insulation resistance of the specimen, shall then be recorded with the battery lead C connected to one end of the conductor of the specimen at point B. The galvanometer deflection shall be recorded after an electrification period of 1 minute. In the case of a single coil where the deflection is small and is decreasing, the galvanometer scale reading may be taken at the end of 15 seconds.

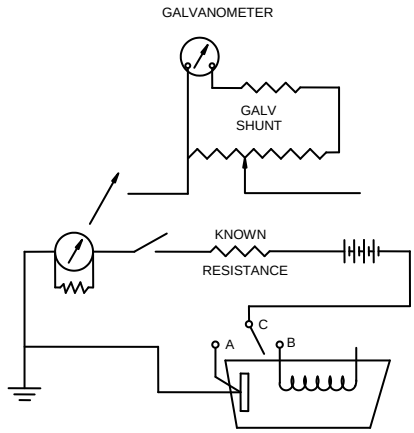

FIGURE 6031

5. RESULTS

5.1 Calculation.

5.1.1 The resistance of the insulation per 1,000 feet shall be calculated as follows:

$$R = \frac{K\ L\ F}{1{,}000\ (DS\text{-}ds)}$$

where:
R=the resistance of the insulation in megohms for 1,000 feet.
K=the galvanometer constant as described in 4.7.
L=the length of specimen in feet.
D=the galvanometer scale deflection in divisions for the specimen.
d=the galvanometer scale deflection in divisions for the leakage reading.
S=the shunt constant for the deflection observed for the specimen reading.
s=the shunt constant for the deflection observed for the leakage reading.
F=the temperature correction factor (table I).

TABLE I.

Temperature		Correction factor		
°F	°C	Types R, RW	Types T, TW	Type RH
50	10.0	0.60	0.79	0.73
51	10.6	0.63	0.81	0.76
52	11.1	0.67	0.82	0.78
53	11.7	0.71	0.84	0.80
54	12.2	0.75	0.86	0.83
55	12.8	0.79	0.88	0.86
56	13.3	0.82	0.90	0.88
57	13.9	0.86	0.92	0.91
58	14.4	0.90	0.95	0.94
59	15.0	0.95	0.97	0.97
60	15.6	1.00	1.00	1.00
61	16.1	1.05	1.03	1.03
62	16.7	1.10	1.06	1.07
63	17.2	1.16	1.10	1.10
64	17.8	1.22	1.14	1.13
65	18.3	1.28	1.19	1.17
66	18.9	1.34	1.23	1.20
67	19.4	1.41	1.27	1.24
68	20.0	1.48	1.33	1.28
69	20.6	1.55	1.39	1.32
70	21.1	1.63	1.46	1.36
71	21.7	1.71	1.55	1.40
72	22.2	1.80	1.67	1.45
73	22.8	1.89	1.78	1.50
74	23.3	1.98	1.91	1.55
75	23.9	2.08	2.06	1.59
76	24.4	2.18	2.23	1.64
77	25.0	2.29	2.39	1.69
78	25.6	2.40	2.56	1.75
79	26.1	2.52	2.75	1.80
80	26.7	2.65	2.93	1.86

5.1.2 Unless otherwise specified in the detail specification or specification sheet, the temperature correction factor shall be as shown in table I. If the measurement is made at a temperature other than 15.6°C, the manufacturer shall correct the measured value of insulation resistance to the resistance at 15.6°C. If the insulation resistance is equal to or greater than that required when the measurement is made at a temperature greater than 15.6°C, no correction factor need be employed. The manufacturer shall demonstrate that the correction factor is accurate for his compound.

5.2 Unless otherwise specified in the detail specification or specification sheet, the entire delivery of the wire or cable shall be tested.

5.3 The insulation resistance in megohms per 1,000 feet shall be recorded to the nearest 10 percent.

5.4 The test voltage and time of application shall be recorded.

Method 6041.1
18 APRIL 2014

SURFACE RESISTANCE, FINISHED WIRE AND CABLE

1. SCOPE

1.1 This method is intended for use in determining the surface resistance of the wire or cable. This test is not required for shielded wire.

2. SPECIMEN

2.1 The specimen should consist of a 6-inch length of finished wire or cable. In the sampling operation and subsequently until completion of the test, this specimen should be handled with maximum care to avoid even the slightest contamination, especially with regard to the surface area which will be under test. If cleaning of the specimen is appropriate, it should be cleaned by a distilled water wash, followed by an isopropyl alcohol wash and a second distilled water rinse, dried carefully in an air oven, and handled subsequently with maximum care as previously directed.

3. APPARATUS

3.1 The apparatus shall be as follows:

3.1.1 A test chamber capable of maintaining a temperature of 25° ± 1°C and an internal relative humidity of 95 ± 4 percent. A recommended chamber may be formed from a tightly-covered rectangular glass vessel containing an ample reservoir of saturated aqueous solution of chemically pure potassium sulphate (see ASTM E104). The chamber should be instrumented to measure the relative humidity within the chamber, with the humidity indication visible from outside the chamber. All instrumentation through-leads into the chamber should be suitably protected where they enter the chamber, to prevent introduction of any error in the specimen measurements. The electrical resistance of the chamber measured across each pair of lead wires with no specimens in place, shall be not less than 1 million megohms. This measurement should be made after the chamber has been closed and conditioned for 96 hours at 95 ± 4 percent relative humidity and a temperature of 25 ± 1°C.

3.1.2 A DC. voltage source preferably a battery of dry cells, that will supply a voltage of not less than 200 nor more than 500 volts.

3.1.3 A standard resistance scale, and shunts of any suitable pattern.

3.1.4 A suitable instrument for measuring the current that will give an accuracy of within 10 percent and a sensitivity of 1 percent of full scale deflection.

3.1.5 A galvanometer, of fairly high sensitivity and having the following qualifications, has been found to meet the accuracy required. The galvanometer constant shall be not less than 50,000. The means for indicating the deflection shall produce a sharply outlined indication on the scale, and the deflection shall be not less than 100 divisions (measured from zero) when the variable shunt has been set to determine the constant of the galvanometer. The resistance of the shunts and the calibrating resistor shall be checked from time to time.

4. PROCEDURE

4.1 The 6-inch specimen shall be provided, near its center, with two electrodes spaced 1.0 inch apart between their nearest edges. Each electrode shall be composed of several turns of fine (AWG 27 or finer) tin-coated copper wire, wrapped snugly around the circumference of the specimen, leaving a free end of the fine wire of sufficient length for soldering to electrical lead wires. With the specimen and electrodes thus prepared, the electrodes shall be soldered to lead wires in the test chamber, the test chamber shall be closed, and the test assembly shall be conditioned for 96 hours at the specified relative humidity and temperature. The surface resistance between the electrodes shall be measured with a DC potential of not less than 200 volts nor more than 500 volts, while the specimen is still within the test chamber, by noting the potential and leakage current after 1 minute electrification. No temperature correction factor shall be applied. The surface resistance computed by multiplying the applied DC. voltage by the measured overall diameter of the specimen in inches and dividing by the leakage current in microamperes, shall be not less than that specified in the detail specification of specification sheet. Following the initial resistance measurement, a 2,500-volt (rms), 60 cycle potential shall be applied between electrodes for 1 minute. There shall be no evidence of distress such as arcing, smoking, burning, flashover, or dielectric failures. After a discharge interval of 15 to 20 minutes, following the potential test, the surface resistance shall be remeasured and shall be not less than that specified in the detail specification or specification sheet.

5. RESULTS

5.1 Unless otherwise specified in the detail specification or specification sheet, one specimen from each inspection unit shall be tested.

5.2 The DC potential and leakage current shall be recorded.

5.3 The surface resistance value and the remeasured surface-resistance value shall be recorded.

Method 6111.1
18 APRIL 2014

VOLTAGE WITHSTAND, INSULATED WIRE AND CABLE

1. SCOPE

1.1 This method is intended for use in determining whether the insulation over a metallic conductor will withstand a specified voltage without rupture. The voltage withstand test should be conducted under the supervision of an inspector in the plant of the manufacturer of the cable.

2. SPECIMEN

2.1 The specimen should consist of one or more coils or reels of finished insulated wire or cable or an equal length of insulated wire or cable taken after the vulcanization process but before the braiding or finishing operation.

3. APPARATUS

3.1 The apparatus shall be as follows:

3.1.1 A suitable container equipped with stirrer in which the specimen may be immersed in water.

3.1.2 A suitable grounding electrode or the equivalent (which may be the surface of a tank if metal and not insulated from the water).

3.1.3 A circuit-breaker and a suitable means for indicating the current flow in the test circuit.

3.1.4 A suitable source of power of not less than 5 KVA, having a frequency not greater than 100 and not less than 25 cycles per second and a testing transformer, the output voltage of which can be adjusted and which shall provide a test voltage having a wave form approximating a sine curve as closely as possible.

3.1.5 A suitable means for measuring the secondary or high voltage side of the transformer such as a tertiary coil and voltmeter, an electrostatic voltmeter, or a potential transformer with suitable low-voltage indicator.

3.1.6 The assembled apparatus shall be such that the capacity of the test circuit supply will be adequate to maintain the required test voltage without overheating the test equipment.

4. PROCEDURE

4.1 The voltage withstand test shall be conducted on the specimen before the insulation resistance test, method 6031.

4.2 The test voltage shall be as specified in the detail specification of specification sheet.

4.3 Unless otherwise specified in the detail specification or specification sheet, the test voltage shall be applied for a period of 1 minute from the time the specified voltage has been reached.

4.4 The test voltage shall have a frequency not greater than 100 nor less than 25 cycles and shall have a wave form approximating a sine curve as closely as possible.

4.5 The voltage withstand test may be made before the braiding or finishing operation during manufacture, but not before any vulcanizing process. Single conductor cable shall be tested between the conductor and water in which it is immersed. Lead-covered single-conductor cable shall be tested prior to the application of the lead sheath. Individual conductors of a multiple-conductor cable shall be tested before assembly as described for single conductor cable. After assembly, the multiple-conductor cable shall be tested between a single conductor against all other conductors or arranged in two or more groups for testing; these tests may be conducted without immersion or with immersion using the water as a ground. After covering, a lead covered cable shall be tested between each conductor and the lead sheath, or between each conductor and its continguous conductors and to the sheath, without immersion.

4.6 The specimen shall be immersed in water for a period of at least 12 hours before the application of the potential. Unless otherwise specified in the detail specification or specification sheet, tap water will be used. The water in which the specimen is tested while immersed, as well as the lead-covered and multiple-conductor cable, shall be at a temperature of between 10° and 27°C for at least 30 minutes before the test. No correction factor for temperature is to be applied. The ends of the specimen shall be kept well above the surface of the water and the covering removed from the surface of the insulation for several inches at each end in order to reduce surface leakage. If the insulation resistance of the specimen is to be measured after voltage withstand test, the ends of the specimen shall be dipped into melted paraffin or other satisfactory material to minimize the effort of moisture in reducing insulation resistance between the covering and conductor. The water in the bath shall be stirred to maintain a uniform temperature throughout the bath during the test.

4.7 Starting at zero, the applied voltage shall be increased gradually until the required test value is reached or until breakdown occurs. The applied voltage shall be increased as uniformly as possible so that 100 percent of the rated voltage of the specimen is reached in not less than 10 seconds and not more than 60 seconds. Failure can usually be determined by a sudden current increase and may be indicated by the tripping of a circuit-breaker in series with the test coil, or by other means. It may also be indicated by a flash at the point on the specimen where breakdown occurs. If other means fail, the insulation resistance readings described in method 6031 will detect the voltage withstand failure.

5. RESULTS

5.1 Unless otherwise specified in the detail specification or specification sheet, the entire delivery of the wire or cable shall be tested.

5.2 Whether the insulation of the entire delivery withstood the specified test voltage without failure shall be recorded.

5.3 The test voltage an time of application shall be recorded.

Method 6121.1
18 APRIL 2014

VOLTAGE WITHSTAND, INSULATION, FLEXING

1. SCOPE

1.1 This method is intended for use in determining the ability of insulated wire or cable to withstand a limited amount of flexing without breakdown of the insulation. It is particularly applicable to varnished cloth insulated wire and cable with or without metallic coverings.

2. SPECIMEN

2.1 The specimen should be a piece of the inspection unit at least 13 feet in length.

3. APPARATUS

3.1 The apparatus shall consist of a mandrel of the size specified in the detail specification.

4. PROCEDURE

4.1 The test voltage and the period of time of its application shall be as specified in the detail specification.

4.2 Any covering shall be removed from the surface of the insulation of a single conductor specimen for a distance of about 1 inch from each end. The ends shall be dipped into melted paraffin or other suitable material to minimize the effect of moisture in reducing insulation resistance between the covering and the conductor. In the case of multiple-conductor cable the conductors shall be separated at each end of the specimen and the ends treated as described for single-conductor cable. In the case of lead-covered cable the lead shall be stripped back for a distance of 3 or 4 inches at each end of the specimen.

4.3 A segment of length of the specimen shall be bent through an arc of 180° around a mandrel the required diameter. The same segment of the specimen shall be straightened and bent through a 180° arc in the opposite direction. The specimen shall be straightened again and the double bend cycle repeated, making a total of 4 bends of the same segment. The specimen shall be so held that rotation about the length axis of the segment does not occur during the bending operation. After the final bending operation the specimen shall be left in the bent position. The entire bent portion of the specimen plus an additional 20 percent of the length of the unbent portion beyond each end of the arc shall be wrapped in metal foil or other suitable conducting material (except when lead sheathed).

4.4 The bent specimen shall be subjected to the voltage withstand test as described in method 6111.

4.5 A flat twin cable shall be bent on the minor axis of its cross section only.

5. RESULTS

5.1 Unless otherwise specified in the detail specification, one specimen from each inspection unit shall be tested.

5.2 Whether the insulation of the specimen withstood the specified test voltage without failure shall be recorded.

5.3 The voltage withstand of the insulation of the inspection unit shall be the result obtained from the specimen tested.

5.4 The test voltage, time of application, and size of mandrel used shall be recorded.

Method 6131.1
18 APRIL 2014

VOLTAGE WITHSTAND, INSULATION, FLEXING, LOW TEMPERATURE

1. SCOPE

1.1 This method is intended for use in determining the ability of insulated wire and cable to withstand a limited amount of flexing at low temperature without breakdown of the insulation. It is particularly applicable to varnished cloth and rubber insulated wire and cable.

2. SPECIMEN

2.1 The specimen should be a piece of the inspection unit at least 13 feet in length.

3. APPARATUS

3.1 The apparatus shall be as follows:

3.1.1 A mandrel having the diameter indicated in table I.

TABLE I.

Thickness of conductor insulation (64ths inch)	Mandrel diameter as multiple of over-all cable diameter	
	Up to 500,000 circular mil conductor	500,000 circular mil conductor and over
10 to 12 - - - - - -	8	10
13 to 20 - - - - - -	10	12
20 and over - - -	12	12

3.1.2 A cold chamber as a refrigerator or other equipment capable of maintaining the specimens at the required temperature within ± 2°C (4°F).

4. PROCEDURE

4.1 Unless otherwise specified in the detail specification, the specimen shall be subjected to a temperature of -12° ± 2°C (14 ± 4°F) for a period of not less than 5 hours.

4.2 Unless otherwise specified in the detail specification, the test voltage shall be applied for a period of 2 hours from the time the specified voltage is reached.

4.3 The test voltage shall be as specified in the detail specification.

4.4 Any covering shall be removed from the surface of the insulation of a single-conductor cable specimen for a distance of about 1 inch from each end. The ends shall be dipped into melted paraffin or other suitable material to minimize the effect of moisture in reducing insulation resistance between the covering and the conductors. In the case of multiple-conductor cable the conductors shall be separated at each end of the specimen and the ends treated as described for single-conductor cable. In the case of lead-covered cable the lead shall be stripped back for a distance of 3 or 4 inches at each end of the specimen. The specimen shall be placed in the low temperature chamber at the required temperature for the required period of time.

4.5 Immediately after the end of this period, the specimen shall be removed from the low temperature chamber and a segment of its length bent through an arc of 180° around a mandrel of the size required in table I. It shall be straightened and the same segment bent 180° in the opposite direction around the mandrel. The specimen shall be bent at a uniform rate so that the time of bending shall not exceed 0.5 minute. The specimen shall be held so that rotation about the length axis of the segment does not occur during the bending operation.

4.6 Immediately after the second bending, the bent specimen shall be subjected to the voltage withstand test as described in method 6111.

4.7 A flat twin cable shall be bent on the minor axis of its cross section only. The minor diameter shall be used in arriving at the size of the mandrel.

5. RESULTS

5.1 Unless otherwise specified in the detail specification, one specimen from each inspection unit shall be tested.

5.2 Whether the insulation of the specimen withstood the specified test voltage without failure shall be recorded.

5.3 The voltage withstand of the insulation of the inspection unit shall be the result obtained from the specimen tested.

5.4 The test voltage, temperature, and time of exposure shall be recorded.

Method 6211.1
18 APRIL 2014

INSULATION DEFECTS, SPARK TEST

1. SCOPE

1.1 This method is intended for use in detecting defects in the insulation of insulated wires and cables. Presence of a weak spot in the insulation results in a breakdown at that spot. When breakdown occurs, the spark test equipment is arranged to either automatically stop the coiling equipment or produce a visible or audible signal. From the manufacturer's viewpoint this method is preferred to the immersion test method as it constitutes a continuous test that can be used at any time after vulcanization of the insulation. It is, in effect, instantaneous, whereas the standard voltage withstand test and insulation resistance test require the immersion of the wire in water for a minimum period of 12 hours. It is not intended that the spark test completely replace the voltage withstand test and insulation resistance test. The method is applicable to single conductor wire or cable size No. 6 AWG and smaller.

2. SPECIMEN

2.1 Unless otherwise specified, the specimen should be the entire length of wire or cable offered for inspection.

3. APPARATUS

3.1 The apparatus shall be as follows:

3.1.1 Spark tester.

3.1.1.1 A transformer of sufficient capacity to maintain the test voltage specified in the detail specification under all normal conditions of leakage current.

3.1.1.1.1 The core of the transformer and one end of the secondary winding shall be connected to ground.

3.1.1.2 A voltmeter shall be so located in the circuit that it will indicate at all times the actual test voltage applied.

3.1.1.3 The spark tester shall not be simultaneously connected to more than one electrode described in 3.1.2

3.1.2 Electrode.

3.1.2.1 An electrode which makes direct mechanical contact with the surface of the insulation of the wire or cable undergoing test. A pipe, coiled spring, or the like shall not be acceptable.

3.1.2.2 If the link or bead-chain type of electrode is used, the bottom of the metal electrode enclosure shall be V-shaped. The chains shall have a length appreciably greater than the depth of the enclosure. The width of the trough shall be approximately 1 ½ inches greater than the diameter of the largest wire or cable to be tested.

3.1.2.3 If a bead-chain type of electrode is used, the beads shall have a diameter of 3/16 inch. The longitudinal spacing of the chains shall be not more than ½ inch. The transverse spacing of the chains shall be not more than 3/8 inch, except that the spacing may be ½ inch if the transverse rows of chain are staggered.

3.1.2.4 The electrode shall be provided with a grounded metallic screen or the equivalent as a guard against contact by personnel.

3.1.2.5 The length of electrode shall be sufficient to meet the requirements in 4.3.

3.1.3 Fault signaling device.

3.1.3.1 A fault signing device or system shall include a visible signal, a defect recording device, and/or an automatic stop device. The arrangement shall be such that when the fault signal is given, it will be maintained until manually reset.

4. PROCEDURE

4.1 The spark test shall be conducted as near the end of the manufacturing process as is practicable, preferably as the wire or cable is being cut into shipping lengths.

4.2 The test voltage shall be as specified in the detail specification.

4.3 The conductor or shield of shielded and jacked cable shall be earth grounded during the spark test. An earth-ground connection shall be made at both the pay-off and take-up reels except that, if the wire is tested for continuity and the conductor is of one integral length, the earth-ground connection need be made at only one point; i.e., either the take-up or pay-off reel. In any case, the conductor on a reel at which an earth-ground connection is made shall be bonded directly to the earth ground on the transformer in the spark tester.

4.4 The length of the electrode is not specified, but the rate of speed at which the wire travels through the electrode shall result in any point on the wire being in contact with the electrode for not less than a total of 18 positive and negative crests of the supply voltage (the equivalent of 9 full cycles of the supply voltage). The maximum acceptable speed for the wire shall be determined by the following formula:

$$\text{Feet per minute} = 5/9 \times \text{frequency in hertz} \times \text{electrode length in inches}$$

5. RESULTS

5.1 Unless otherwise specified in the detail specification, the entire delivery of the wire or cable shall be tested.

5.2 Whether the insulation of the entire delivery withstood the specified test voltage without failure shall be recorded.

5.3 The test voltage shall be recorded.

Method 6221.1
18 APRIL 2014

DIELECTRIC STRENGTH, CLOTH AND TAPE

1. SCOPE

1.1 This method is intended for use in determining the average voltage per unit of thickness that an insulating cloth or tape will withstand without breakdown. It is particularly applicable to varnished cloth or tape.

2. SPECIMEN

2.1 The specimen should be a piece of the varnished cloth approximately 2 feet in length taken from a single tape (layer) of the inspection unit.

3. APPARATUS

3.1 The apparatus shall be as follows:

3.1.1 A transformer with an adjustable output voltage supplied by a source having a frequency of 25 to 100 cycles (preferably 60 cycles) and a wave form approximating a sine curve as closely as possible.

3.1.2 A set of brass or copper electrodes ¼ inch in diameter. The electrodes shall be rounded to a radius of 1/32 inch and finished with a flat polished contact surface. They shall be self-aligning and mounted exactly opposite each other so as to prevent any surface burning of the tape or flashovers. The electrodes shall be clean and polished.

3.1.3 Clamps and blocks of insulating materials for holding the specimen.

4. PROCEDURE

4.1 Approximately 2 feet of each tape layer shall be removed from the inspection unit. Unless otherwise specified in the detail specification, 10 percent of the tapes but not less than five tapes shall be drawn at random for test.

4.2 The specimen shall be conditioned for 48 hours at a temperature of 23° ± 1°C (73.5° ± 2°F) and a relative humidity of 50 ± 4 percent.

4.3 The edges of the specimen shall be clamped between blocks of insulating materials under a pressure of approximately 100 pounds per square inch to prevent flashovers occurring before puncture. Starting at zero, the voltage shall be increased uniformly to breakdown at a rate of 500 volts per second, except that if breakdown occurs at this rate in less than 40 seconds, the voltage rate shall be decreased so that the breakdown will require at least 40 seconds. If the material fails at less than 5 kilovolts, the minimum time shall be reduced from 40 to 20 seconds. The breakdown voltage shall be measured to the nearest 50 volts and the value recorded as V. Five tests equally spaced along the length at the center of the specimen shall be made.

4.4 The thickness of the specimen shall be measured as described in method 1051 except that one thickness measurement shall be made near each puncture in such a way as to represent as closely as possible the thickness at the point of puncture and the value recorded as T.

5. RESULTS

5.1 Calculation. The dielectric strength of cloth or tape at the point measured shall be calculated as follows:

$$\text{Dielectric strength, volts per mil} = \frac{V}{T}$$

where:

V=the puncturing voltages at the point measured, volts

T=the thickness near the point of puncture, mils

5.2 Unless otherwise specified in the detail specification, one specimen from each inspection unit shall be tested.

5.3 The average breakdown voltage of the tape shall be the average of the five tests made on the specimen.

5.3.1 When more than one specimen is tested from each inspection unit, the average breakdown voltage of the cloth or tape shall be the average of the results obtained from the specimens tested.

5.4 The minimum breakdown voltage of the cloth or tape shall be the smallest of all the values averaged in determining the average breakdown voltage, 5.3.

5.5 The average and minimum dielectric strength of each tape tested shall be recorded to the nearest 50 volts per mil of thickness.

Method 6271.1
18 APRIL 2014

CAPACITANCE CHANGE WITH TIME IN WATER

1. SCOPE

1.1 This method is intended for use in determining the effect of moisture on moisture-resistant insulation due to immersion in water for varying periods of time by measuring the changes in the dielectric constant of the insulation.

2. SPECIMEN

2.1 The specimen should be a 15-foot length of the inspection unit from which any covering over the insulation has been removed; or the specimen may be taken after vulcanization and prior to the application of any covering.

3. APPARATUS

3.1 The apparatus shall be as follows:

3.1.1 A suitable capacitance bridge. The bridge shall be capable of measuring the capacitance with a limit of error of 1 microfarad. It shall be capable of measuring the capacitance of a specimen one side of which is grounded. Provisions shall be made for connecting and disconnecting the specimen at the specimen end of the leads connecting the specimen to the bridge.

3.1.2 A water bath in which the specimen can be immersed.

4. PROCEDURE

4.1 Unless otherwise specified in the detail specification, the specimen shall be immersed in water at room temperature not less than 21° C (70°F) for a period of 14 days.

4.2 Unless otherwise specified in the detail specification, readings shall be taken after 22, 166, and 334 hours of immersion in water at room temperature not less than 21°C (70°F).

4.3 The diameter of the specimen over the insulation and over the conductor shall be determined as described in method 1011 and the value recorded as D and d respectively. The middle 10 feet of the specimen shall be immersed in distilled water for the required period of time. A 2.5-foot portion of each end of the specimen shall be kept well above the surface of the water as leakage insulation. The capacitance of the insulation shall be determined at a frequency of either 1,000 or 60 cycles, using a suitable capacitance bridge. The voltage impressed upon the conductor shall be sufficient to give the required sensitivity of measurement, except that the impressed voltage on the conductor shall not be greater than 40 volts per mil of insulation thickness. The specimen shall be immersed to the same depth and the temperature of the water bath shall be the same at the time readings are taken after each immersion period.

5. RESULTS

5.1 Calculation. The dielectric constant (K) of the insulation shall be calculated after each immersion period as follows:

$$K = 13{,}600\ C\ \mathrm{Log}_{10}\ D/d$$

where:

C=the capacitance in microfarads of the immersed 10 feet of the specimen
D=the diameter over the insulation, inches
d=the diameter over the conductor, inch

5.2 Unless otherwise specified in the detail specification, one specimen from each inspection unit shall be tested.

5.3 The capacitance change of the insulation of the inspection unit shall be the result obtained from the specimen tested.

5.3.1 When more than one specimen is tested from each inspection unit, the capacitance change of the insulation of the inspection unit shall be the average of the results obtained from the specimens tested.

5.4 The capacitance change of the insulation of the inspection unit shall be recorded to the nearest 0.1 percent.

5.5 The temperature and time of immersion shall be recorded.

Section 7000

CHEMICAL TESTS

Method 7001.1
18 APRIL 2014

CHEMICAL TESTS; GENERAL

1. SCOPE

1.1 This section describes various chemical test methods for insulated wire and cable. Methods are described for the determination of resistance of coverings to acids and alkalies, armor and conductor coatings, mineral content of coverings, composition of lead coverings, and the qualitative identification of elastomers in insulation and sheath. The qualitative methods include tests for natural rubber for the purpose of a more positive identification.

2. SPECIMEN

2.1 Preparation of specimens of insulation and sheath for qualitative tests. Three or four-gram portions of the insulation or sheath should be taken at different places on each inspection unit in the sample. Each portion should be cleaned of any adhering material and ground by passing three or four times through a clean cold laboratory rubber mixing mill with the rolls set close. A total of at least 15 grams of the ground material should be prepared for the qualitative tests. Specimens should be taken from this composite sample for use in the various qualitative tests described in method 7251.

2.1.1 If the uniformity of the composition of the insulation or sheath of the sample is in doubt, a ground portion from each inspection unit should be prepared, separately and tested.

2.2 Specimens for the other chemical tests should be taken from the inspection unit and prepared for tests as described in the individual test method.

3. APPARATUS AND REAGENTS

3.1 The following general laboratory apparatus and reagents shall be available. Special apparatus and reagents are described in the individual methods.

3.1.1 Apparatus

3.1.1.2 Analytical balance and weights.

3.1.1.3 Baths, water, steam.

3.1.1.4 Beakers.

3.1.1.5 Burners, gas.

3.1.1.6 Burettes.

3.1.1.7 Cheese cloth or other wiping cloth.

3.1.1.8 Crucible tongs.

3.1.1.9 Desiccators.

3.1.1.10 Drying oven, ventilated.

3.1.1.11 Filter paper.

3.1.1.12 Flasks, Erlenmeyer, suction, etc.

3.1.1.13 Furnace, muffle.

3.1.1.14 Graduated cylinders.

3.1.1.15 Hot plate.

3.1.1.16 Laboratory mill.

3.1.1.17 Pipettes.

3.1.1.18 Thermometers.

3.1.2 Reagents.

3.1.2.1 Acetone.

3.1.2.2 Alcohol, ethyl, methyl.

3.1.2.3 Ammonium hydroxide, sp. gr. 0.90.

3.1.2.5 Alcohol.

3.1.2.6 Distilled water.

3.1.2.7 Ether.

3.1.2.8 Hydrochloric acid, sp. gr. 1.19

3.1.2.9 Nitric acid, sp. gr. 1.43.

3.1.2.10 Sodium hydroxide.

3.1.2.11 Sulfuric acid, sp. gr. 1.83.

Method 7011.1
18 APRIL 2014

RESISTANCE TO ACID AND ALKALI

1. SCOPE

1.1 This method is intended for use in determining the resistance of the fibrous covering and armor on insulated wire and cable to acids and alkalies. It is applicable to single and multiple conductor cable with non-metallic armor and a saturated fibrous over-all covering.

2. SPECIMEN

2.1 The specimen should be a piece of the inspection unit 12 inches in length.

3. APPARATUS AND REAGENTS

3.1 The apparatus and reagents shall be as follows:

3.1.1 Balance accurate to 10 milligrams.

3.1.2 Glass container of sufficient size for complete immersion of the specimen.

3.1.3 Glass framework or other device for supporting specimens so as to prevent them from touching each other or the surface of the container.

3.1.4 Water bath, equipped with cover, capable of maintaining the specimen at the required temperature within ± 0.5°C (1°F).

3.1.5 Acetic acid, 5 percent solution by volume.

3.1.6 Calcium hydroxide, saturated solution.

3.1.7 Sodium hydroxide, N solution.

3.1.8 Sulphuric acid, b percent solution by volume.

4. PROCEDURE

4.1 Unless otherwise specified in the detail specification, the following solutions shall be used for immersion of the specimen:

(a) Normal sodium hydroxide solution.
(b) Saturated calcium hydroxide solution.
(c) Sulphuric acid, 5 percent solution by volume.
(d) Acetic acid, 5 percent solution by volume.

4.2 Unless otherwise specified in the detail specification, the specimen shall be subjected to a temperature of 22 ± 1°C (72° ± 2°F) for a period of 46 ± ¼ hour.

4.3 The contents of the immersion vessel shall be restricted to specimens known to be of the same composition.

4.4 The specimen shall be free from mechanical damage and shall not be bent or flexed until it has reached room temperature. Handling and flexing of the specimen shall be reduced to a minimum necessary in carrying out the test. The ends of the specimen shall be sealed for a distance of about ¼ inch by dipping in melted paraffin, asphalt, or other satisfactory sealing medium. The specimen shall be dried 46 hours or to a constant weight, whichever is quicker, in a desiccators over anhydrous calcium chloride at room temperature. The specimen shall then be removed from the desiccators, weighed within 3 minutes to the nearest 10 milligrams, and the weight recorded as W_1. Four specimens shall be prepared and one immersed in each of the solutions specified in 4.1.

4.5 The specimen shall be placed in the immersion vessel and completely surrounded with the solution in such a manner that the solution can circulate freely around it during the exposure period. At the end of the exposure period, 4.2, the specimen shall be removed from the solution, rinsed for 15 seconds in running water, shaken to remove any loose water, and any adhering surface water removed by blotting lightly with clean absorbent cloth. The specimen shall be weighed within 3 minutes to the nearest 10 milligrams and the weight recorded as W_2. The fibrous covering and armor shall be examined for visible effect of attack by the chemicals and then stripped off.

4.6 The conductors, insulation, and insulation covering shall be weighed to the nearest 10 milligrams and the weight recorded as W_3.

5. RESULTS

5.1 Calculation. The solution absorbed by the specimen shall be calculated as follows:

$$\text{Absorption, percent} = \frac{W_2 - W_1}{W_2 - W_3} \times 100$$

where:
W_1=the weight of the dry specimen, grams
W_2=the weight of the specimen after immersion, grams
W_3=the weight of the conductors, insulation and insulation covering, grams

5.2 Unless otherwise specified in the detail specification, one specimen from each inspection unit shall be tested in each solution.

5.3 The absorption of the covering or armor of the inspection unit for the particular solution used shall be the results obtained from the specimen tested.

5.3.1 When more than one specimen is tested, the absorption of the covering or armor of the inspection unit for the particular solution shall be the average of the results obtained from the specimens tested.

5.4 Any attack on the fibrous covering or armor of the inspection unit by the solution shall be recorded.

5.5 The absorption of the covering of the inspection unit shall be recorded to the nearest 0.1 percent.

5.6 The immersion solution, exposure period, and exposure temperature shall be recorded.

Method 7021.3
18 APRIL 2014

FLUID IMMERSION

1. SCOPE

1.1 This method is intended for use in determining the ability of cable to resist degradation when exposed to specific fluids they may come in contact with during their service life.

2. SPECIMEN

2.1 An individual sample for each applicable fluid 18 inch minimum in length, shall be stripped to the bare conductor on either end for one inch.

3. APPARATUS

3.1 The apparatus shall include the following:

a. A vessel to contain the various fluids in sufficient quantity to completely immerse 2/3 of the wire or cable specimen.
b. An air circulating oven capable of maintaining temperature within ± 3˚C of required setting. The maximum test temperature is 175˚C.
c. Table stove of hot plates.
d. An immersion thermometer that reads a range 0 to 150˚C.

4. TEST FLUIDS

4.1 Unless otherwise specified in the detail specification or the contract order, the fluids shall be as specified in table I.

5. PROCEDURE

5.1 Before proceeding with the fluid immersion, the sample shall be weighed. The applicable test fluid shall be stabilized at the temperature specified in table I. A separate specimen shall be immersed in each fluid to a minimum of 2/3 of the specimen's length. Immersion and cycling shall be as specified in table I. Following the last immersion, the specimen shall be dried.

RESULTS

6.1 Any change of weight or delamination, softening, swelling (finished diameter of material), reduction of electrical properties (e.g., dielectric withstanding voltage, scrape abrasion), or discoloration of material finishes and markings shall be recorded.

TABLE I. Test fluids and cycles

Fluid	Test cycles			Number of cycles[1/]
	Time	Immerse(±3˚C)	Drain	
(a) Hydraulic fluid conforming to MIL-PRF-83282, Mil-PRF-87257, or MIL-PRF-5606[2/]	5 minutes	85˚C	1 hour minimum in air at room temperature	7
(b) Hydraulic fluid- Exxon M2V oil, or equivalent[3/]	5 minutes	85˚C	1 hour minimum in air at room temperature	7
(c) Turbine fuel conforming to MIL-DTL-5624, grade JP-5	5 minutes	25˚C	1 hour minimum in air at room temperature	7
(d) Lubricating oil conforming to MIL-PRF-7808	5 minutes	125	1 hour minimum in air at room temperature	7
(e) Lubricating oil conforming to MIL-PRF-23699	5 minutes	120	1 hour minimum in air at room temperature	7
(f) Defrosting fluid conforming to SAE AMS1424	5 minutes	65	1 hour minimum in air at room temperature	7
(g) Cleaning compound conforming to MIL-PRF-87937	5 minutes	65	1 hour minimum in air at room temperature	7
(h) Mixture of 50% by volume Kerosene conforming to ASTM D3699 and 50% by volume lubricating oil conforming to SAE J1966, grade 1100	16 hours	48˚C to 50˚C	3 hours	1
(i) Gasoline conforming to ASTM D4814, type I	5 minutes	25˚C	24 hours in free air	5
(j) Mixture of 25% percent by volume of isopropyl alcohol conforming to TT-I-735, grade A or B, with 75% by volume of mineral spirits paint thinner or degreasing solvent conforming to MIL-PRF-680, type I	5 minutes	25˚C	24 hours in free air	5
(k) Isopropyl alcohol (TT-I-735)	4 hours	25˚C	2 hours	1
(l) Cleaning compound, aircraft surfaces, conforming toA-A-59921 (diluted for cleaning)	1 hour	50˚C	2 hours	10

1/ Transition time between steady state conditions shall be 2 minutes, maximum. Steady state conditions shall be ±1 minute unless otherwise noted. The wire shall be drained by gravity during drainage portions of cycle.

2/ MIL-PRF-5606 hydraulic fluid shall only be used if required by the detail specification or the contract or order.

3/ Exxon Mobil Corp. may be contacted at 1-800-443-9966 to determine availability of this fluid.

Method 7111.1
18 APRIL 2014

ZINC COATING, STEEL ARMOR

1. SCOPE

1.1 This method is intended for use in determining the uniformity of zinc coating on steel armor of insulated cable.

2. SPECIMEN

2.1 The specimen should be the armor removed from a piece of the inspection unit at least 6 inches in length.

3. APPARATUS AND REAGENTS

3.1 The apparatus and reagents shall be as follows:

3.1.1 Glass container with 2-inch inside diameter for testing No. 12-gage wire and smaller, and 3-inch inside diameter for wires larger than 12 gage.

3.1.2 Copper-sulfate solution, specific gravity 1.186.

4. PROCEDURE

4.1 Preparation of standard copper-sulphate solution. The solution shall be prepared by dissolving commercial copper-sulphate crystals in distilled water. Enough crystals should be added to insure a solution which, when cooled to 18°C, will have a specific gravity of at least 1.186. One gram of cupric oxide (CU_2O) per liter shall be added to the solution for the purpose of neutralizing any free acid which may be present. The solution shall be diluted with water to a specific gravity of 1.186 at 18°C (65°F). The solution shall be renewed for each specimen tested.

4.2 The specimen shall be free from mechanical damage. The surface of one end of the specimen shall be cleaned for a length of at least 3 inches by means of the solvent, rinsing with water, and drying with cheesecloth. The cleaned portion of the specimen shall not be allowed to contact the hands or foreign matter previous to immersion in the copper sulfate solution. Standard copper sulfate solution shall be added to the container to a depth of 2.5 inches and the temperature adjusted to 18°C (65°F). The cleaned 3-inch length of the specimen shall be immersed in the solution by placing it in the center of the container in a vertical position. The specimen shall remain in the solution for 60 seconds without being moved or the solution stirred. At the end of the immersion period, it shall be removed from the solution, rinsed with running water while being rubbed lightly with cheesecloth to remove any loosely adhering black deposit, and dried with cheesecloth. The surface of the specimen shall be examined for bright copper deposit, avoiding contact of the surface with the hands during the cleaning, drying, and examining period.

4.3 Unless otherwise specified in the detail specification, one additional immersion and examination shall be made as described in 4.2.

4.4 The percentage of the total area of the specimen showing fixed copper deposit shall be determined by visual examination.

5. RESULTS

5.1 Unless otherwise specified in the detail specification, two specimens from each inspection unit shall be tested.

5.2 The uniformity of the zinc coating of the inspection unit shall be the average of the results obtained from the specimens tested.

5.3 The immersed area of the inspection unit showing fixed copper deposit after each immersion of the inspection unit shall be recorded to the nearest 5 percent.

5.4 The number of immersions shall be recorded.

Method 7121.1
18 APRIL 2014

CONDUCTOR COATING, SODIUM POLYSULFIDE

1. SCOPE

1.1 This method is intended for use in determining the uniformity of the coating on copper conductors of insulated wire and cable. It is applicable to tin-lead-, and lead-alloy coated copper. For determining the uniformity of lead or lead-alloy coatings method 7123 gives more conclusive results and should be used in case of dispute when these two determinations are involved.

2. SPECIMEN

2.1 The specimen should be the conductor removed from a piece of the inspection unit at least 6 inches in length.

3. APPARATUS AND REAGENTS

3.1 The apparatus and reagents shall be as follows:

3.1.1 Glass containers of sufficient size to hold 180 ml. of solution and permit immersion of at least 4 ½ inches of specimen.

3.1.2 Hydrochloric acid, sp. gr. 1.088.

3.1.3 Sodium polysulfide, sp. gr. 1.142.

4. PROCEDURE

4.1 Preparation of test solution. The test solutions, 3.1.2 and 3.1.3, shall be prepared as follows:

4.1.1 Sodium polysulfide solution (specific gravity 1.142). A concentrated solution shall be prepared by dissolving sodium-sulfide crystals in distilled water to form a saturated solution in 15.5°C (60°F), adding 250 grams of flowers of sulfur per liter of solution and allowing the solution to stand for at least 24 hours. The test solution shall be prepared by diluting the concentrated solution with distilled water to a specific gravity of 1.142 ± 0.002 at 15.5°C (60°F). This test solution should have sufficient strength to thoroughly blacken a piece of clean untinned copper wire in 5 seconds. The solution shall be considered to be exhausted when it fails to blacken a piece of clean copper within 5 seconds.

4.1.2 Hydrochloric acid solution (specific gravity 1.088). This solution shall be prepared by diluting concentrated hydrochloric acid to a specific gravity of 1.088 ± 0.002 at 15.5°C (60°F) with distilled water. This solution shall be considered exhausted for test purposes when the following number of specimens have been immersed in a volume of 180 milliliters of the acid for two cycles:

Wire diameter (inch)	Maximum number of specimens tested for 2 cycles in 180 ml. acid solution
0.400 0.441 - - - - - -	2
0.140 0.0851 - - - - -	4
0.0850 0.0501 - - - - -	6
0.0500 0.0381 - - - - -	10
0.0380 0.0301 - - - - -	12
0.0300 0.0030 - - - - -	14

4.2 The specimen shall be free from mechanical damage. The surface of the specimen shall be cleaned by immersing in carbon tetrachloride or other suitable solvent for at least 3 minutes and wiping dry with cheesecloth. The portion of the specimen to be immersed in the test solutions shall not come in contact with the hands or foreign matter during the test. Sodium polysulfide solution shall be transferred to the container to a depth of 4 ½ inches. A similar amount of the hydrochloric acid solution shall be placed in another container. Both solutions shall be adjusted to a temperature of 18° ± 2°C (65° ± 4°F).

4.3 Immersion of specimen, lead and lead-alloy-coated. Unless otherwise specified in the detail specification for lead- and lead-alloy-coated conductors, a 4 ½ inch length of the clean specimen shall be immersed in accordance with the following cycles at a temperature of 18° ± 2°C (65° ± 4°F).

4.3.1 Thirty seconds in the sodium polysulfide solution, 3.1.3, washed in clean running water, and shaken to remove excess water.

4.3.2 The same 4 ½-inch length shall be immersed in the hydrochloric acid solution, 3.1.2, for a period of 1 minute, washed in clean running water, and shaken to remove excess water.

4.3.3 The same 4 ½-inch length shall again be immersed for 30 seconds in the sodium polysulfide solution, washed in clean running water, and shaken to remove excess water.

4.3.4 The same 4 ½-inch length shall again be immersed for 1 minute in the hydrochloric acid solution, washed in clean running water, and shaken to remove excess water.

4.4 Immersion of specimen, tin-coated. Unless otherwise specified in the detail specification, for tin-coated conductors a 4 ½-inch length of the clean specimen shall be immersed in accordance with the following cycles at a temperature of 18° ± 2°C (65° ± 4°F).

4.4.1 One minute in the hydrochloric acid solution, 3.1.2, washed in clean running water, and shaken to remove excess water.

4.4.2 The same 4 ½-inch length shall be immersed for 30 seconds in the sodium polysulfide solution, 3.1.3, washed in clean running water, and shaken to remove excess water.

4.4.3 The same 4 ½-inch length shall again be immersed for 1 minute in the hydrochloric acid solution, washed in clean running water, and shaken to remove excess water.

4.4.4 The same 4 ½-inch length shall again be immersed for 30 seconds in the sodium polysulfide solution, washed in clean running water, and shaken to remove excess water.

4.5 At the end of the above cycles of immersion, the specimen shall then be examined for the presence of blackened areas resulting from the action of sodium polysulfide. Blackening that occurs within 0.5 inch of the cut ends shall be disregarded. Blackening of the coated surface caused by the treating the specimen with sodium polysulfide should disappear when treated with hydrochloric acid leaving blackened areas only where copper is exposed.

4.6 The percentage of the total area of the specimen showing exposed copper (blackened area) shall be determined by visual examination.

5. RESULTS

5.1 Unless otherwise specified in the detail specification, three specimens from each inspection unit shall be tested.

5.2 The uniformity of the coating of the conductor of the inspection unit shall be the average of the results obtained from the specimens tested.

5.3 Two immersed area of the inspection unit showing exposed copper shall be recorded to the nearest 5 percent.

5.4 The number of immersion cycles and temperature of solution shall be recorded.

Method 7123.1
18 APRIL 2014

CONDUCTOR COATING, AMMONIUM PERSULFATE

1. SCOPE

1.1 This method is intended for use in determining the uniformity of the coating on copper conductors of insulated wire and cable. It is applicable to lead- and lead-alloy-coated copper. For determining the uniformity of lead or lead-alloy coatings this method gives more conclusive results than method 7121 and it should be used in case of dispute when these two coatings are involved.

2. SPECIMEN

2.1 The specimen should be the conductor removed from the inspection unit. The length of the specimen should be determined by substituting the appropriate value of *K*, given in table I, in the formula: L=K/D, where *L* is the length in inches of the specimen and *D* is the diameter in inch of the coated conductor.

TABLE I

Wire diameter (inch)	K
0.400 – 0.321 - - - - - - - - -	1.2
0.320 – 0.161 - - - - - - - - -	0.8
0.160 – 0.0810 - - - - - - - -	.4
0.0800 – 0.0400 - - - - - - -	.2
0.0390 – 0.0830 - - - - - - -	.1

3. APPARATUS AND REAGENTS

3.1 The apparatus and reagents shall be as follows:

3.1.1 Glass container of sufficient size for immersion of the specimen.

3.1.2 White paper.

3.1.3 Ammonium persulfate solution.

3.1.4 Reference color standard solution.

4. PROCEDURE

4.1 Preparation of test solutions. The test solutions, 3.1.3 and 3.1.4 shall be prepared as follows:

4.1.1 Ammonium persulfate solution. The ammonium persulfate solution shall be prepared by dissolving 10 grams of c.p. ammonium persulfate crystals in 500 ml. of distilled water, adding 75 ml. of ammonium hydroxide, sp. gr. 0. 90, and diluting to 1 liter with distilled water. The ammonium persulfate crystals shall contain not less than 95 percent ammonium persulfate. The solution shall be freshly prepared each day and shall not be subjected to temperatures above 38°C (100°F).

4.1.2 Reference color standard; copper sulfate-ammonium hydroxide. The reference color standard solution shall be prepared by dissolving 0.100 grams of anhydrous copper sulfate in distilled water, adding 75 milliliters of c.p. ammonium hydroxide, specific gravity 0.90, and diluting the volume to 1 liter with distilled water.

4.2 Unless otherwise specified in the detail specification, the specimen shall be immersed for a period of 15 ± ½ minute at a temperature of 30° ± 1°C (86° ± 2°F).

4.3 The specimen shall be free from mechanical damage. The specimen shall be cleaned by immersing in suitable solvent for not less than 3 minutes and wiping dry with clean cheesecloth. The cleaned specimen shall not be handled with bare hands or come in contact with foreign matter and shall be kept wrapped in a clean cloth until required for test. The ends of the specimen shall be coated with melted paraffin to protect the exposed copper. The paraffin-coated length shall not be included in determining the length of the specimen.

4.4 The specimen of the required length, 2.1, shall be immersed in a test tube in the quantity of test solution specified in table II for the required period of time at the required temperature.

TABLE II

Wire diameter (inch)	Quantity of test solution (milliliters)
0.460 – 0.321 - - - - - -	150
0.320 – 0.161 - - - - - -	100
0.160 – 0.0810 - - - - -	50
0.0800 – 0.0400 - - - -	25
0.0390 – 0.0030 - - - -	12.5

4.5 The specimen shall then be removed and the color of the test solution compared with that of an equal volume of color standard in a test tube of equal dimensions. The discontinuity of the coating is represented by the intensity of the color of the test solution in relation to the intensity of color of the standard solution. The color comparison shall be made by viewing the solutions lengthwise against a white back ground. If available, a colorimeter or spectrophotometer may be used in making the color comparison.

4.6 The intensity of the color of the test solution relative to the reference color standard for each specimen shall be recorded.

5. RESULTS

5.1 Unless otherwise specified in the detail specification, three specimens from each inspection unit shall be tested.

5.2 The uniformity of the coating of the conductor of the inspection unit shall be the results obtained from the specimens tested.

5.3 The time and temperature of immersion shall be recorded.

Method 7211.1
18 APRIL 2014

MINERAL CONTENT, COVERINGS

1. SCOPE

1.1 This method is intended for use in determining the mineral content of the fibrous coverings of insulated wire and cable. It is especially applicable to wire and cable designed to be weather-resistant.

2. SPECIMEN

2.1 The specimen should be the fibrous covering with the adhering compound taken from a piece of the inspection unit at least 6 inches in length.

3. APPARATUS

3.1 The apparatus shall consist of a 75 ml. crucible.

4. PROCEDURE

4.1 The specimen shall be placed in a tared crucible (W_2), weighed, and the weight recorded as W. The crucible containing the materials shall be heated at low temperature to remove most of the flammable material and ashed to a constant weight at about 600°C. (1112°F) in a muffle furnace. The crucible shall be cooled to room temperature in a desiccators, weighed, and the weight recorded as W_1. The weights shall be made to an accuracy of 1 milligram.

4.2 Unless otherwise specified in the detail specification, in constructions involving two or more over-all fibrous coverings, the mineral filler content of all the fibrous coverings shall be determined in one operation as described in 4.1 for the outer covering.

5. RESULTS

5.1 Calculation. The mineral content of the specimen shall be calculated as follows:

$$\text{Mineral content of fibrous covering percent} = \frac{W_1 - W_2}{W - W_2} \times 100$$

where:
W_1=the weight of the ash plus crucible
W=the weight of the covering materials plus crucible
W_2=the weight of the crucible

5.2 Unless otherwise specified in the detail specification, one specimen from each inspection unit shall be tested.

5.3 The mineral content of the covering of the inspection unit shall be the result obtained on the specimen tested.

5.3.1 When more than one specimen is tested, the mineral content of the covering of the inspection unit shall be the average of the results obtained from the specimens tested.

5.4 The mineral content of the fibrous covering of the inspection unit shall be recorded to the nearest 1 percent.

Method 7231.1
18 APRIL 2014

LEAD SHEATH, COMPOSITION

1. SCOPE

1.1 This method is intended for use in determining the composition of lead sheath of insulated wire and cable. Procedures are described for the determination of copper, bismuth, arsenic, antimony, tin, iron, zinc, and silver. The amount of lead present is determined by the difference.

2. SPECIMEN

2.1 The specimen should consist of approximately the following amounts of lead sheath taken from the inspection unit:

2.1.1 Copper and bismuth determination as specified in 4.1.1.

2.1.2 Arsenic, antimony, and tin determinations – 50 grams.

2.1.3 Iron determination – 50 grams.

2.1.4 Zinc determination – 50 grams.

2.1.5 Silver determination – 100 grams.

3. APPARATUS AND REAGENTS

3.1 The apparatus shall be as follows:

3.1.1 Arsenic distillation apparatus. The apparatus shown on figure 7231C shall consist of a 500-ml. Erlenmeyer flask fitted with a ground-glass stopper carrying a ¼-inch glass distillation tube, a thermometer, and a 2-mm. inside diameter glass capillary pressure regulator which extends to within 1/8 inch of the bottom of the flask.

3.1.2 Beads, glass.

3.1.3 Buchner funnel, approximately 5-cm. in diameter.

3.1.4 Colorimetric tubes, 100-ml or suitable colorimeter or spectrophotometer.

3.1.5 Compressed air source.

3.1.6 Crucible, Gooch, with asbestos pad.

3.1.7 Cylinder of carbon dioxide.

3.1.8 Flask, glass stoppered iodine, 250-ml.

3.1.9 Glass wool or cotton.

3.1.10 Hydrogen sulfide generator.

3.1.11 Ice bath.

3.1.12 Litmus paper.

3.1.13 Silver electrolysis apparatus. The apparatus shown on figure 7231A shall consist of two lead anodes enclosed in Alundum shells 19 by 90 mm. and a single platinum gauze cathode 25 to 80 mm. in diameter and 40 to 50 mm. in length to fit a 600-ml beaker. The three electrodes shall be connected to a single binding post so that good electrical contact is made. The anodes shall be made by winding pure lead wire, 2.5 mm. in diameter by 70 cm. in length, around 5-mm glass tubing to form a compact helix, leaving sufficient wire at the top to form a lead to the binding post (copper and bismuth). For stirring the catholyte, the apparatus shall be equipped with a glass corkscrew stirrer with tungsten shaft attached to a 1,000 RPM motor geared so that the solution is drawn towards the cathode. The apparatus shall be equipped with an anolyte reservoir for flushing out the anode chambers during the electrolysis. The apparatus shall be equipped with an anode of pure copper wire, 2 mm. in diameter, silver-free and uncorroded, for use in determination of silver.

3.1.14 Silver reductor.

3.1.14.1 This apparatus shall be similar in design to figure 7231D, and shall conform to the following dimensions:

Internal diameter - - - - - - - - - - - - - - - 15 to 20 mm.
Length of reductor column - - - - - - - - 120 to 150 mm.
Capacity of reservoir - - - - - - - - - - - - 50 to 75 mm.

3.1.14.2 Preparation of silver reductor. Sixty grams of silver nitrate shall be dissolved in 400 ml. of water and a few drops of nitric acid added. A sheet of metallic copper, about 10 cm. square, shall be suspended in the silver nitrate and the solution stirred mechanically until all the silver has precipitated, as shown by the absence of silver chloride precipitate on addition of hydrochloric acid to a few milliliters of the solution. The sheet of copper shall be removed from the solution and the precipitated silver washed by decantation with sulfuric acid solution (1 to 199) until most of the dissolved copper is removed. Water shall be added to the silver precipitate and the mixture poured into the reductor column, the lower end of which contains a plug of glass wool placed over a few glass beads. After the solution has drained to the top of the silver column, the silver precipitate shall be washed repeatedly with 1 to 199 sulfuric acid until all the copper has been removed, as shown by the absence of a blue color on the addition of ammonium hydroxide to the washings. The reductor shall then be filled with 1 to 9 hydrochloric acid solution. When not in use, the reductor shall be kept full of hydrochloric acid solution (1 to 9).

3.1.14.3 Regeneration of silver. During the reduction of ferric iron by passing a hydrochloric acid solution of iron through the reductor, silver chloride forms at the top of the column. This silver chloride darkens, leaving a blackening around the column. When this dark layer has extended one-half to three-fourths of the length of the tube down the column, the silver chloride and silver shall be transferred to a beaker and covered with 1 to 199 sulfuric acid solution and a zinc rod placed in the beaker so that the zinc is in contact with the silver chloride. The silver chloride is reduced to silver which shall be washed and returned to the reductor column for further use.

3.1.15 Tin reduction apparatus. The apparatus shown on figure 7231B shall consist of a flask closed with a three-hole rubber stopper containing an inlet tube for carbon dioxide, an air condenser, and a hole for a burette (glass plugged).

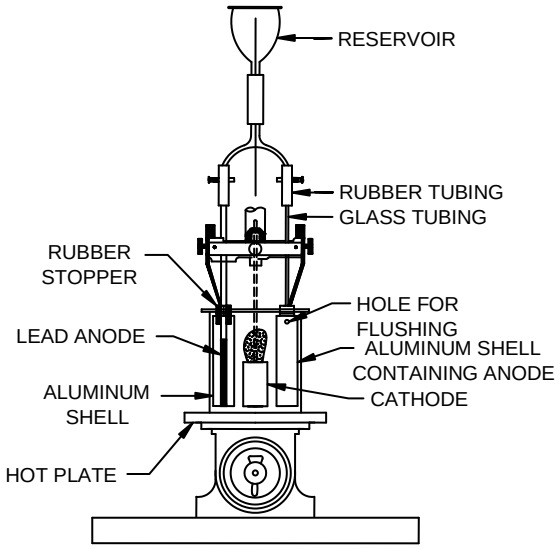

FIGURE 7231A. Apparatus for internal electrolysis.

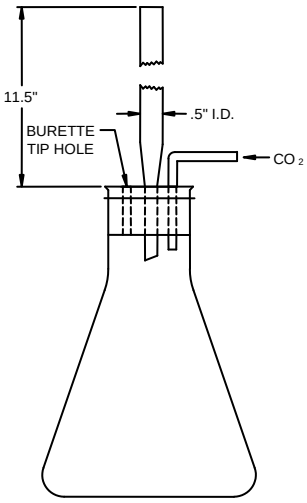

FIGURE 7231B. Apparatus for reduction of tin.

3.2 The reagents shall be as follows:

3.2.1 Ammonium alum. solution. The solution shall be prepared by dissolving 3.5 grams of ammonium alum ($AlNH_4(SO_4)_2 12H_2O$) in 100 ml. of distilled water. (One ml. of the solution contains approximately 2 mg. of Al.)

3.2.2 Ammonium chloride, 1 percent solution.

3.2.3 Ammonium persulfate, 10 percent solution, prepared fresh as required.

3.2.4 Ammonium sulfate, 35 percent solution. The solution should contain less than 0.0005 percent arsenic.

3.2.5 Ammonium thiocyanate, 20 percent solution.

3.2.6 Antimony chloride solution. The solution shall be prepared by dissolving 2 grams of antimony chloride ($SbCl_3$) in 200 ml. of hydrochloric acid, specific gravity 1.19, and diluting to 1 liter with distilled water.

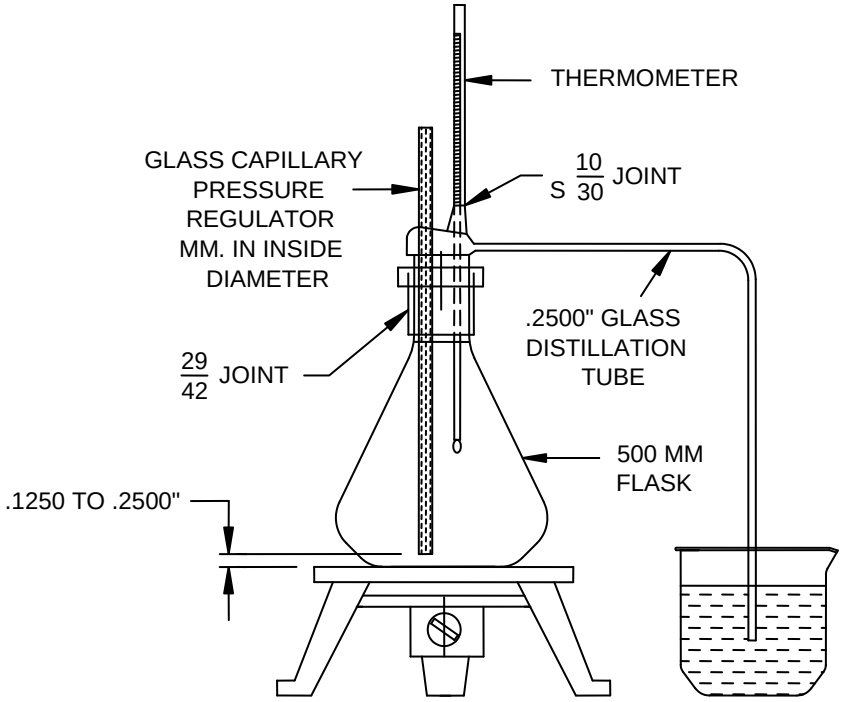

FIGURE 7231C. Apparatus for distillation of arsenic.

3.2.7 Bismuth sulfate, standard solution. The solution shall be prepared by dissolving 1.0000 gram of metallic bismuth in a small excess of nitric acid, specific gravity 1.43, adding 20 ml. of sulfuric acid, specific gravity 1.83, evaporating to dense white fumes, cooling, rinsing the sides of the vessel with water and evaporating again to dense white fumes, and diluting to 1 liter with distilled water in a volumetric flask. This primary solution shall be diluted 1 to 10 for bismuth standards.

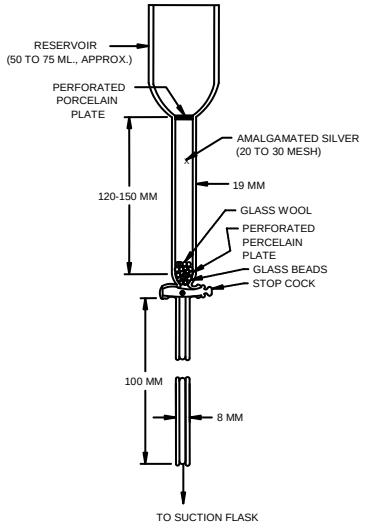

FIGURE 7231D. Silver reductor.

3.2.8 Bismuth colorimetric standards. These standards shall be prepared by transferring to 100 ml. colorimetric tubes, 0.2 to 1.4 mg. of bismuth, in increments of 0.1 mg., from the standard solution in 3.2.7, adding 2 ml. of 40 percent potassium iodide, 2 ml. of 20 percent sodium thiocyanate solution, 0.5 ml. of starch solution, and 2 ml. of 0.1 N sodium thiosulfate solution to each tube, diluting to 90 ml. with distilled water, adding 1 ml. of 1 to 1 sulfuric acid, and diluting to 100 ml. These standards should be prepared just before the test is conducted.

3.2.9 Standard ceric sulfate solution, 0.1 N. This solution shall be prepared by dissolving 54 grams of $Ce(HWO_4)4$ in 500 ml. of distilled water containing 16 ml. of sulfuric acid, sp. gr. 1.83, and diluting to 1 liter. The solution shall be standardized by either of the following methods:

3.2.9.1 Method A. Approximately 0.2 gram of iron of known composition shall be transferred to a 250-ml beaker and dissolved in 20 ml. of 1 to 1 hydrochloric acid and 1 to 2 ml. of saturated bromine water. The solution shall be boiled to expel excess bromine, stannous chloride solution (150 grams of $SnCl_2 2H_2O$ in 1 liter of 1 to 2 hydrochloric acid) added dropwise while stirring, until the yellow color just disappears, and exactly 1 drop in excess. The solution shall be cooled to room temperature and 10 ml. of 5 percent mercuric chloride added all at once. The precipitate should be white and milky. (If it is gray, the solution shall be discarded.) One drop of ortho-phenanthroline ferrous complex indicator shall be added and the solution titrated with ceric sulfate to a pale blue or colorless end point.

3.2.9.2 Method B. Twenty-five ml. of 0.1 N arsenous acid solution shall be added to a 400-ml. beaker, 10 ml. of 1 to 1 sulfuric acid, 3 drops of osmium tetroxide (2.5 grams per liter of 0.1 N sulfuric acid), as a catalyst, and 1 drop of ortho-phenanthroline ferrous complex indicator added. The solution shall be titrated to a pale blue or colorless end point with the standard ceric sulfate solution.

3.2.10 Citric acid, 20 percent solution.

3.2.11 Copper nitrate anolyte solution. The anolyte solution shall be prepared by dissolving 4 grams of metallic copper in nitric acid, sp. gr. 1.43, evaporating just to dryness, adding 30 ml. of nitric acid, and diluting to 1 liter.

3.2.12 Copper sulfate standard solution. The solution shall be prepared by dissolving 1.0000 gram of metallic copper in 15 ml. of 1 to 3 nitric acid, adding 5 ml. of sulfuric acid, sp. gr. 1.83, and evaporating to white fumes. The beaker shall be cooled, the walls washed down with 20 ml. of distilled water and the solution again evaporating to dense white fumes. Two hundred ml. of 1 to 1 sulfuric acid shall be added and the solution made to 1 liter in a volumetric flask.

3.2.13 Copper sulfate, 04 percent solution.

3.2.14 Formic acid, specific gravity 1.20.

3.2.15 Formic acid mixture. The solution shall be prepared by mixing 200 ml. of formic acid, specific gravity 1.20, 970 ml. of distilled water and 30 ml. of ammonium hydroxide, specific gravity 0.90.

3.2.16 Formic acid mixture wash solution. The solution shall be prepared by diluting 25 ml. of formic acid mixture, 3.2.15, to 1 liter with distilled water and saturating the solution with hydrogen sulfide.

3.2.17 Hydrazine sulfate.

3.2.18 Hydrogen peroxide, 3 percent solution.

3.2.19 Hydrogen sulfide wash solution. The solution shall be prepared by saturating sulfuric acid solution, 2 to 98, with hydrogen sulfide.

3.2.20 Iodine, 0.1 N solution. The solution shall be prepared by dissolving 12.7 grams of iodine and 40 grams of potassium iodide in 25 ml. of distilled water. When solution is complete it shall be diluted to one liter and stored in a cool place in a dark bottle. The solution shall be standardized as follows: Ten ml. of a tin solution (1 ml. equal to 0.001 gram of tin) shall be pipette into a 500-ml. flask, 10 ml. of sulfuric acid, specific gravity 1.83, 20 grams of sodium chloride, 75 ml. of hydrochloric acid, specific gravity 1.19, and 5 grams of test lead added. The solution shall be reduced and titrated with the iodine solution as described in 4.3.4.

3.2.21 Iron, standard solution. The solution shall be prepared by dissolving 0.100 gram of iron (National Bureau of Standards standard sample No. 55b of ingot iron is satisfactory) in 10 ml. of 1 to 1 hydrochloric acid and 1 ml. of bromine water, boiling to remove the excess bromine, adding 20 ml. of the hydrochloric acid, and diluting to 1 liter in a volumetric flask.

3.2.22 Manganese nitrate, 10 percent solution.

3.2.23 Manganese sulfate, 10 percent solution.

3.2.24 Methyl orange indicator. The solution shall be prepared by dissolving 0.1 gram of methyl orange in 100 ml. of distilled water and filtering off any residue.

3.2.25 Metallic mercury.

3.2.26 Nitric acid-tartaric acid wash solution. The wash solution shall be prepared by dissolving 20 grams of chloride-free tartaric acid in 200 ml. of 1 to 9 nitric acid and diluting to 1 liter.

3.2.27 Ortho-phenanthroline indicator solution. The solution shall be prepared by dissolving 6.95 grams of ferrous sulfate ($FeSO_4 7H_2O$) in 1 liter of distilled water and adding 14.85 grams of ortho-phenanthroline monohydrate ($C_{12}H_2N2H_2O$).

3.2.28 Potassium bisulfate.

3.2.29 Potassium bromated, 0.01 N solution. The solution shall be prepared by dissolving 0.2784 grams of potassium bromated ($KBrO_2$) in distilled water and diluting to 1 liter in a volumetric flask.

3.2.30 Potassium ferrocyanide, 0.7 percent solution.

3.2.31 Potassium iodide, 1, 10, and 40 percent solutions.

3.2.32 Potassium permanganate, 1 and 2 percent solutions.

3.2.33 Sodium chloride.

3.2.34 Sodium thiocyanate, 20 percent solution.

3.2.35 Sodium thiosulfate, 10 percent solution.

3.2.36 Sodium thiosulfate, 0.1 N solution. The solution shall be prepared by dissolving 24.8 grams of sodium thiosulfate ($Na_2S_2O_2 5H_2O$) in 1 liter of freshly boiled and cooled distilled water. The solution shall be standardized as follows: Ten ml. of standard copper sulfate solution shall be transferred to a 250-ml. wide-mouth flask, the solution diluted to 25 ml. with distilled water, cooled to room temperature, and titrated with the standard sodium thiosulfate solution as described in 4.1.2. If sulfur precipitates during preparation or on standing, the solution shall be discarded.

3.2.37 Starch, 1 percent solution, prepared fresh, as required.

3.2.38 Talc suspension. The suspension shall be prepared by suspending 50 grams of talc in 1 liter of distilled water.

3.2.39 Tartaric acid-chloride-free.

3.2.40 Test lead.

3.2.41 Urea.

3.2.42 Zinc chloride solution. The solution shall be prepared by dissolving 4.0000 grams of pure zinc in 200 ml. of 1 to 4 hydrochloric acid and diluting to 1 liter.

3.2.43 Zinc turbidity standards. The standards shall be prepared by transferring to 50-ml. colorimetric tubes portions of the zinc solution prepared in 3.2.42 containing from 0.01 to 0.1 mg. of zinc, in increments of 0.01 mg., and adding 15 ml. of 1 to 9 hydrochloric acid and 45 ml. of distilled water to the tubes. Five ml. of 0.7 percent potassium ferrocyanide solution shall be added and the solution mixed. The standards should be prepared just before the test is conducted.

4. PROCEDURE

4.1 Copper and bismuth in leads containing over 0.02 percent bismuth.

4.1.1 Specimen size. The size of the specimen used will depend on the copper and bismuth content and shall be as indicated in the following table:

Type of lead	Copper	Bismuth	Weight of specimen	
			Copper determination	Bismuth determination
	Percent	Percent	Grams	Grams
Common desilverized lead A	0.0025 max	0.15	20	10
Acid lead	0.04 to 0.08	0.025	20	20
Copper lead	0.04 to 0.08	0.1	10	10

4.1.2 Determination of copper and bismuth. A specimen of suitable size as determined in 4.1.1 shall be transferred to a 600-ml. beaker and 1 gram of tartaric acid, 20 ml. of 1 to 4 nitric acid, and an additional 5 ml. of nitric acid per gram of specimen added. The mixture shall be heated gently until solution is complete and then boiled to expel the brown fumes. The solution shall be diluted to 250 ml., cooled to 40°C (104°F), and a 1 percent solution of potassium permanganate added while stirring until the solution remains colored for at least 1 minute. The solution shall be allowed to stand or heated gently to expel the color, the temperature adjusted to 37° ± 3°C (100° ± 5°F), 2 ml. of 10 percent potassium iodide added while stirring, and then set aside for about 10 minutes, avoiding exposure to direct sunlight. The solution shall be filtered through a Gooch into a 600-ml. beaker, washed with distilled water, and the precipitate discarded. The solution shall be boiled until the iodine is expelled and the solution becomes colorless, and then the boiling continued for 10 minutes longer. It shall be diluted to 350 ml. and 50 mg. of urea added. The temperature shall be adjusted to 68 ± 3°C (154° ± 5°F) and then electrolyzed while stirring at 850 to 1,000 RPM in the apparatus described in 3.1.13 using 3 percent nitric acid as the anolyte. During the electrolysis the anode chambers shall be flushed, the sides of the beaker and the anode shall be rinsed down, and approximately 50 mg. of urea added once or twice. After the copper and bismuth are completely deposited most of the electrolyte shall be removed by siphoning while adding slowly 1 liter of water. The beaker shall be removed and quickly replaced with one containing distilled water. The beaker shall be removed, the electrode detached, rinsed with distilled water, and then dipped twice into separate portions of ethyl alcohol or methyl alcohol. The electrode shall be dried at 110° ± 1°C (230° ± 2°F) for 5 minutes, cooled, and weighed. This weight minus the weight of the clean electrode is the weight of the copper bismuth deposit (*A*). The weighed electrode shall be transferred to a 250-ml. wide-mouth flask and the copper-bismuth deposit dissolved in a mixture of 5 ml. of 3 percent hydrogen peroxide and 2 ml. of sulfuric acid, sp. gr. 1.83. The electrode shall be well rinsed and removed from the flask, the solution evaporated to dense white fumes to remove all the hydrogen peroxide, the residue cooled, and diluted to 25 ml. with distilled water. Five ml. of 40 percent potassium iodide and 5 ml. of a 20 percent solution of sodium thiocyanate shall be added and the solution titrated with 0.1 N sodium thiosulfate. When the end point is reached, 1 ml. of 1 percent starch solution shall be added and the solution titrated to the disappearance of the blue color. The number of milliliters of sodium thiosulfate used shall be recorded as *B*. (In the titration of solutions containing bismuth the starch indicator must be added after the addition of the sodium thiocyanate and before the beginning of the titration.)

4.2 Copper and bismuth in leads containing 0.02 percent bismuth and under. A specimen containing 20 grams shall be used for lead sheaths made of soft undesilverized lead and chemical lead. A specimen containing about 20 grams of the lead sheath shall be transferred to a 600-ml. beaker, the specimen dissolved, the copper and bismuth deposited, and the copper titrated as described in 4.1.2. The number of milliliters of sodium thiosulfate required to titrate the copper shall be recorded as *B*. Two ml. of sodium thiosulfate in excess shall be added. Macerated filter paper shall be added, the solution diluted to 100 ml. in a graduated cylinder, and then filtered through a close-texture, dry paper. An aliquot of the filtrate containing 0.2 to 1.4 mg. of bismuth shall be transferred to a 100-ml. colorimetric tube and diluted to 100 ml. with distilled water. The color shall be compared with a series of freshly prepared bismuth colorimetric standards. The comparisons may be made by visual observations of the solutions in tubes placed against a white background. If available, a colorimeter or a spectrophotometer may be used for making the color comparison.

4.3 Arsenic, antimony, and tin.

4.3.1 Preparation of solution of arsenic, antimony, and tin. A specimen containing about 50 grams of the lead sheath shall be transferred to a 500-ml. Erlenmeyer flask and 200-ml. of 1 to 8 nitric acid added. The mixture shall be heated gently to dissolve the lead and then boiled to expel the brown fumes. The solution shall be diluted to 300 ml. heated to boiling, 10 ml. of 2 percent potassium permanganate and 20 ml. of 10 percent manganese nitrate added, and then boiled gently for about 2 minutes. The hot solution shall be filtered through a rapid filter paper and the precipitate washed with hot water. The filtrate shall be labeled (a) and reserved. The paper containing the precipitate shall be returned to the original Erlenmeyer flask, 15 ml. of sulfuric acid, sp. gr. 1.83 and 35 ml. of nitric acid, sp. gr. 1.43, added, and the solution heated gently to boiling to destroy the filter paper. The solution shall be labeled (b) and reserved. One-hundred ml., or enough to remove all of the lead of 35 percent ammonium sulfate, shall be added to the filtrate labeled (a) while stirring, the solution cooled to room temperature, filtered through a close-textured paper on a Buchner funnel, and washed once with distilled water. The precipitate of lead sulfate shall be discarded. The filtrate shall be neutralized with ammonium hydroxide, 15 ml. added in excess, heated to boiling, 10 ml. of 10 percent ammonium persulfate added, and then boiled vigorously for 1 minute. The solution shall be filtered through a rapid filter paper, the precipitate transferred to the paper, washed four times with hot water, and the filtrate discarded. The paper and precipitate shall be transferred to the solution in the 500-ml. Erlenmeyer flask labeled (b). This flask contains all the arsenic, antimony, and tin plus some manganese, lead, and a trace of copper. Thirty-five ml. of nitric acid, specific gravity 1.43, shall be added to the flask and the solution heated gently to destroy the carbonaceous material, adding more nitric acid if necessary. The solution shall be evaporated to dense white fumes, the residue cooled, 3 grams of potassium bisulfate and 0.1 gram of hydrazine sulfate added, and the sides of the flask washed down with water, making certain that no hydrazine sulfate remains on the walls. The solution shall be evaporated to dense white fumes, and then heated over an open flame until the volume has been reduced to about 10 ml. The arsenic, antimony, and tin shall be determined as described in 4.3.2, 4.3.3, and 4.3.4, or in 4.3.5, 4.3.6, and 4.3.7.

4.3.2 Arsenic and antimony by bromated titration. The solution from 4.3.1 shall be cooled to room temperature, the sides of the flask washed down with 150 ml. of distilled water, 20 ml. of hydrochloric acid added, and the solution heated to about 90°C (194°F) to dissolve all of the lead salts. One drop of methyl orange indicator shall be added and the solution titrated with 0.01 N potassium bromated until the red color weakens. A second drop of methyl orange shall be added and the titration continued slowly until the color changes to yellow or colorless. The titrated solution shall be reserved for use in 4.3.3. A blank determination shall be made using the same amount of reagents and following the same procedure. The number of milliliters of potassium bromate required to titrate the arsenic and antimony (A) is equal to the total titration minus the blank titration.

4.3.3 Antimony by bromate titration. Glass beads shall be added to the titrated solution reserved in 4.3.2 and the solution boiled until the volume is reduced to 100 ml. The solution shall be transferred to a 250-ml. glass-stoppered iodine flask, the 500-ml. Erlenmeyer flask rinsed with 40 ml. of hydrochloric acid and the washings added to the iodine flask. Two ml. of 0.4 percent copper sulfate shall be added, the solution cooled to room temperature, 5 ml. of metallic mercury added (if mercurons chloride is precipitated more hydrochloric acid should be added), and the flask stoppered and shaken vigorously for 5 minutes. The solution shall be decanted into the 500-ml. Erlenmeyer flask and the mercury washed, adding the wash to the solution. The solution shall be diluted to about 350 ml. and, with air bubbling, slowly through it, heated to 90°C (194°F). The air stream shall be discontinued, 1 drop of methyl orange indicator added, and the antimony titrated slowly at 90°C (194°F) with 0.01 N potassium bromated. The titrated solution shall be reserved for tin determination in 4.3.4. A blank determination shall be made using the same amounts of reagents and following the same procedure. The number of milliliters of potassium bromate required to titrate the antimony (*B*) is equal to the total titration minus the blank titration.

4.3.4 Tin by iodine titration. Thirty milliliters of hydrochloric acid, specific gravity 1.19, and sufficient 0.2 percent antimony chloride solution to make the total antimony chloride solution to make the total antimony content of the flask equal to about 10 mg. shall be added to the titration solution reserved in 4.3.3. Five grams of test lead shall be added and the solution boiled gently for 15 minutes. When the deposition of noble metals is complete, the solution shall be filtered through cotton or glass wool into a wide-mouth 500-ml. Erlenmeyer flask containing 5 grams of test lead and 20 grams of sodium chloride. The flask shall be assembled into a tin reduction apparatus as described in 3.1.15. A stream of carbon dioxide shall be passed through the flask, the solution gradually heated to boiling, and boiled for 1 hour. The flask shall be transferred to an ice bath and the carbon dioxide regulated so that no air will be sucked back into the flask. The solution shall be cooled to about 10°C (50°F) under an atmosphere of carbon dioxide, the plug removed from the third hole of the rubber stopper, and 5 ml. of 10 percent potassium iodide solution and 5 ml. of 1 percent starch solution added. The tip of the burette containing 0.1 N iodine solution shall be immediately inserted into the other hole of the rubber stopper and the solution titrated to the first permanent shade of blue. A blank determination shall be made using the same amounts of reagents and following the same procedure. The number of milliliters of iodine solution required to titrate the tin (E) is equal to the total titration minus the blank titration.

4.3.5 Arsenic by distillation. The solution of arsenic, antimony, and tin shall be prepared as described in 4.3.1. This solution shall be cooled to room temperature, 50 ml. of hydrochloric acid, specific gravity 1.19, and 8 to 10 grams of sodium chloride added. The 500-ml. Erlenmeyer flask shall be connected to the distillation apparatus, 3.1.1, 200 ml. of water placed in the receiving flask, the distillation flask heated to boiling, and continued until the temperature of the distilled vapor reaches 105°C (221°F). The distillation flask shall be unstoppered, the hot plate removed, and the solution reserved for antimony determination in 4.3.6. The delivery tube shall be rinsed into the receiving flask and the distillate heated nearly to boiling. The solution shall be titrated at 85° ± 5°C (185° ± 9°F) with 0.01 N potassium bromate solution, adding methyl orange indicator near the end of the titration. A blank determination shall be made using the same amounts of reagents and following the same procedure. The number of milliliters of potassium bromate solution required to titrate the arsenic (*A*) is equal to the total titration minus the blank titration.

4.3.6 Antimony determination. Two hundred ml. of water shall be added to the solution in the distillation flask reserved in 4.3.5 and the solution boiled to dissolve all of the salts. The hot solution shall be titrated with 0.01 N potassium bromate, adding methyl orange indicator near the end of the titration. The titrated solution shall be reserved for tin determination in 4.3.7. A blank determination shall be made using the same amounts of reagents and following the same procedure. The number of milliliters of potassium bromate solution required to titrate the antimony (*B*) is equal to the total titration minus the blank titration.

4.3.7 Tin by iodine titration. The solution reserved in 4.3.6 shall be diluted to 250 ml., 75 ml. of hydrochloric acid, specific gravity 1.19 added, and the tin determination completed as described in 4.3.4, adding only 10 grams of sodium chloride instead of the 20 grams specified in the procedure.

4.4 Iron by volumetric or colorimetric method.

4.4.1 Preparation of solution of iron. A specimen containing about 50 grams of the lead sheath shall be transferred to a 600-ml. beaker, 250 ml. of 1 to 4 nitric acid added, the mixture heated gently to dissolve the lead, and then boiled to expel the brown fumes. The beaker shall be removed from the hot plate, 35 mil. of 1 to 1 sulfuric acid added, the solution filtered through a close-texture paper on a Buchner funnel, and the beaker and paper washed with hot water. The filtrate and washings shall be collected in a 600-ml. beaker, evaporated to white fumes, the heating continued until the volume of the sulfuric acid is reduced to about 2 ml., and then cooled to room temperature. One hundred ml. of water shall be added, the solution boiled for several minutes, cooled, made neutral with ammonium hydroxide, and 2 ml. of hydrochloric acid, specific gravity 1.19, added. Hydrogen sulfide shall be passed into the solution for about 15 minutes, the precipitate allowed to settle, and then filtered. The precipitate shall be washed with hydrogen sulfide water and then discarded. The filtrate and washings shall be boiled to expel the hydrogen sulfide and the iron oxidized by the addition of a few drops of 3 percent hydrogen peroxide. The solution shall be evaporated to 50 to 75 ml., cooled slightly, and 5 ml. of ammonium alum solution added. The solution shall be neutralized with ammonium hydroxide, adding 2 ml. in excess, boiled for 1 minute, and then set aside for about 1 hour. The precipitated iron shall be filtered on to rapid filter paper, washed with hot 1 percent ammonium chloride, and the filtrate reserved for the determination of zinc in 4.5. The iron shall be determined on the precipitate by the volumetric method described in 4.4.2 or by the colorimetric method as described in 4.4.3.

4.4.2 Iron by volumetric method. The ferric hydroxide precipitate from 4.4.1 shall be dissolved in 20 ml. of 1 to 3 hydrochloric acid, the solution diluted to 50 ml., cooled, and then passed through the silver reductor, 3.1.14, at the rate of 30 ml. per minute. The reductor shall be washed with 100 ml. of 1 to 30 hydrochloric acid, adding the solution in several portions, and allowing each addition to grain to the top of the silver column before the next is added. Ten ml. of 1 to 1 sulfuric acid and 1 drop of ortho-phenathroline indicator shall be added and the reduced iron solution titrated with standard ceric sulfate solution to the disappearance of the pink color. A blank determination shall be made using the same amounts of reagents and following the same procedure. The number of milliliters of ceric sulfate solution required to titrate the iron (A) is equal to the total titration minus the blank titration.

4.4.3 Iron by colorimetric method. The ferric hydroxide precipitate from 4.4.1 shall be dissolved in 20 ml. of hot 1 to 3 hydrochloric acid and cooled to room temperature. The solution shall be transferred to a 100-ml. colorimetric tube, 2 ml. of 20 percent ammonium thiocyanate added, diluted to 100 ml. and mixed well. The color of the solution shall be compared with a standard containing a known amount of iron. The standard shall be prepared by adding dropwise standard iron solution to a colorimetric tube containing 75 ml. of distilled water, 2 ml. of 20 percent ammonium thiocyanate, and 20 ml. of 1 to 3 hydrochloric acid. The solution shall be mixed well and compared with the unknown by visual observation against a white background. If available, a colorimeter or spectrophotometer may be used for making the color comparisons. The standard iron solution shall be added until the color matches that of the specimen, bringing the volume of the final comparison up to 100 ml. in the tube. A blank determination shall be made using the same amounts of reagents and following the same procedure. The number of milliliters of iron solution required to match the specimen (*B*) is equal to the total iron volume minus the volume of iron solution required to match the blank.

4.5 Zinc determination. The ammonical solution in a 600-ml. beaker reserved in 4.4.1 shall be made just acid to litmus with 20 percent citric acid. The solution shall be neutralized with ammonium hydroxide, 25 ml. of formic acid added, the solution diluted to about 200 ml. and 1 ml. of talc suspension added. The mixture shall be heated to about 95°C (203°F) and hydrogen sulfide passed through for 30 minutes while allowing to cool. The beaker shall be set aside for about 1 hour, the precipitate filtered on a 9-cm. close-texture paper, and washed with formic acid mixture wash solution. The zinc sulfide shall be dissolved from the filter paper with 30 ml. of 1 to 9 hydrochloric acid, collecting the filtrate in a 100-ml. volumetric flask. The filter paper shall be washed with hot water and the washings added to the volumetric flask. The solution shall be cooled to room temperature, diluted to 100 ml., and mixed well. An aliquot containing not more than 0.1 mg. of zinc shall be pipetted into a 50-ml. colorimetric tube and 1 to 9 hydrochloric acid added to make the total volume of acid equal to 15 ml. The solution shall be diluted to 45 ml., 5 ml. of 0.7 percent potassium ferrocyanide added, and the solution mixed well. The turbidity shall be compared with a series of standards containing from 0.01 to 0.1 mg. of zinc. If available, a colorimeter or spectrophotometer may be used for making the turbidity comparisons. A blank determination shall be made using the same amounts of reagents and following the same procedure. The number of milliliters of zinc standard required to match the specimen (*A*) is equal to the total volume minus the volume of zinc required to match the blank.

4.6 Silver by iodide method. A specimen containing about 100 grams of the lead sheath shall be transferred to a 800-ml. beaker, 1 gram of chloride-free tartaric acid, and 400 ml. of 1 to 4 nitric acid added, and the mixture heated gently to dissolve the specimen. When reaction ceases, 10 ml. of nitric acid shall be added and the heating continued until all the metal is dissolved and the brown fumes expelled. The solution shall be cooled to room temperature, filtered through a Gooch crucible, and the precipitate discarded. The filtrate shall be transferred to a 600-ml. beaker, diluted to 400 ml. and heated to 55° ± 5°C (131° ± 9°F). Five ml. of 1 percent potassium iodide shall be added while stirring, the solution digested at 50°C (122°F) for 15 minutes, avoiding contact with direct sunlight, and then filtered through a weighed 15-ml. Gooch crucible. The precipitate on the filter shall be washed twice with hot nitric tartaric acid wash solution, followed by washing with hot water (by filling the Gooch crucible and draining by suction) until the filtrate shows no color on treatment with hydrogen sulfide. The silver iodide precipitate in the crucible shall be dried to constant weight at 110° ± 1°C (230° ± 2°F) and weighed. The weight of the crucible plus the precipitate minus the weight of the crucible is equal to the weight of the silver iodide (*A*) in the specimen.

4.7 Silver by electrolytic method. A specimen containing about 100 grams of the lead sheath shall be transferred to a 800-ml. beaker, 320 ml. of 1 to 3 nitric acid added, and the mixture heated on a steam bath to dissolve the metal. If a dark residue remains, it shall be filtered off and dissolved in 5 ml. of 1 to 1 nitric acid and then added to the main solution. The solution shall be boiled to expel the brown fumes, diluted to about 600 ml., and cooled. One percent potassium permanganate solution shall be added drop wise until the solution turns a permanent pink color. Ten grams of tartaric acid shall be added, the solution diluted to 700 ml., and heated to about 85°C (185°F). The solution shall be electrolyzed at about 85°C, while stirring, in a 0.1 percent copper nitrate solution as the anolyte, using the apparatus described in 3.1.13. The anode chambers shall be flushed and the sides of the beaker washed down once or twice during the electrolysis. After 30 minutes of electrolysis the solution shall be removed from the beaker by siphoning while continuing the stirring and adding 1 liter of water. The electrode shall be washed in two successive baths of ethyl alcohol or methyl alcohol, dried in an oven at 110° ± 1°C (230° ± 2°F), for 5 minutes, cooled, and weighed. Usually the deposit maintains a bright silvery appearance throughout the electrolysis and is pure enough for direct weighing as metallic silver. If the deposit is dark, due to contamination, it shall be dissolved in 5 ml. of 1 to 1 nitric acid and the silver determined by repeating the electrolysis. The weight of the electrode plus the silver deposit minus the weight of the clean electrode is equal to the weight of the silver deposit (*A*).

5. RESULTS

5.1 Calculations.

5.1.1 The copper and bismuth content of the lead sheath specimen determined as described in 4.1 shall be calculated as follows:

$$\text{Copper, percent} = \frac{B \times C}{D} \times 100$$

$$\text{Bismuth, percent} = \frac{A-(B \times C)}{D} \times 100$$

where:
A=the weight of the copper bismuth deposit on the electrode.
B=the number of ml. of sodium thiosulfate required to titrate the copper.
C=the grams of copper per ml. of sodium thiosulfate
D=the weight of the lead sheath specimen.

5.1.2 The copper and bismuth content of the lead sheath specimen determined as described in 4.2 shall be calculated as follows:

$$\text{Copper, percent} = \frac{B \times C}{D} \times 100$$

$$\text{Bismuth, percent} = \frac{100E}{DF} \times 100$$

where:
B=the number of ml. of sodium thiosulfate required to titrate the copper.
C=the grams of copper per ml. of sodium thiosulfate.
D=the weight of the lead specimen.
E=the grams of bismuth in the aliquot.
F=the number of ml. of aliquot for bismuth determination.

5.1.3 The arsenic, antimony, and tin content of the lead sheath specimen, determined as described in 4.3, shall be calculated as follows:

5.1.3.1 Arsenic, antimony, and tin by methods in 4.3.2, 4.3.3, and 4.3.4:

$$\text{Arsenic, percent} = \frac{A - B \times C}{G} \times 100$$

$$\text{Antimony, percent} = \frac{B \times D}{G} \times 100$$

$$\text{Tin, percent} = \frac{E \times F}{G} \times 100$$

where:
A=the number of ml. of potassium bromate to titrate arsenic and antimony.
B=the number of ml. of potassium bromate to titrate the antimony.
C=the grams of arsenic per ml. of potassium bromate.
G=the weight of the lead sheath specimen.
D=the grams of antimony per ml. of potassium bromate.
E=the number of ml. of iodine required to titrate the tin.
F=the grams of tin per ml. of iodine solution.

5.1.3.2 Arsenic, antimony, and tin by methods in 4.3.5, 4.3.6, and 4.3.7:

$$\text{Arsenic, percent} = \frac{A \times C}{G} \times 100$$

$$\text{Antimony, percent} = \frac{B \times E}{G} \times 100$$

$$\text{Tin, percent} = \frac{D \times F}{G} \times 100$$

where:
A=the number of ml. of potassium bromate required to titrate the arsenic.
C=the grams of arsenic per ml. of potassium bromate.
G=the weight of the lead sheath specimen.
B=the number of ml. of potassium bromate required to titrate the antimony.
E=the grams of antimony per ml. of potassium bromate.
D=the number of ml. of iodine to titrate the tin.
F=the grams of tin per ml. of iodine solution.

5.1.4 The iron content of the lead sheath specimen determined as described in 4.4 shall be calculated as follows:

5.1.4.1 Iron by volumetric method in 4.4.2

$$\text{Iron, percent} = \frac{A \times C}{G} \times 100$$

where:
A=the number of ml. ceric sulfate required to titrate iron.
C=the grams of iron per ml. of ceric sulfate solution.
G=the weight of the lead sheath specimen.

5.1.4.2 Iron by the colorimetric method in 4.4.3:

$$\text{Iron, percent} = \frac{B \times D}{G} \times 100$$

where:
B=the number of ml. of iron standard required to match the specimen.
D=the grams of iron per ml. of iron standard.
G=the weight of the lead sheath specimen.

5.1.5 The zinc content of the lead sheath specimen determined as described in 4.5 shall be calculated as follows:

$$\text{Zinc, percent} = \frac{A \times B}{G} \times 100$$

where:
A=the number of ml. of zinc standard required to match the specimen.
B=the grams of zinc per ml. of zinc standard solution.
G=the weight of the lead sheath specimen.

5.1.6 The silver content of the lead sheath specimen determined as described in 4.6 and 4.7 shall be calculated as follows:

5.1.6.1 Silver by the iodide method in 4.6:

$$\text{Silver, percent} = \frac{A \times 0.40}{G} \times 100$$

where:
A=the weight of the silver iodide precipitate.
G=the weight of the lead sheath specimen.

5.1.6.2 Silver by electrolysis in 4.7:

$$\text{Silver, percent} = \frac{A}{G} \times 100$$

where:
A=the weight of the silver depot on electrode.
G=the weight of the lead sheath specimen.

5.1.7 The lead content of the specimen shall be calculated as follows:

Lead, percent=100 – (percent copper, bismuth, arsenic, antimony, tin, iron, zinc, and silver)

5.2 Unless otherwise specified in the detail specification, two specimens from each inspection unit shall be tested.

5.3 The metal content (lead copper, bismuth, arsenic, antimony, tin, iron, zinc, or silver) of the sheath of the inspection unit shall be the average of the results obtained from the specimens tested.

5.4 The lead content of the sheath of the inspection unit shall be recorded to the nearest 0.01 percent.

Method 7251.1
18 APRIL 2014

IDENTIFICATION, SYNTHETIC ELASTOMERS, INSULATION AND SHEATH

1. SCOPE

1.1 This method is intended for use in identifying natural and synthetic rubbers, and polyvinyl resins when each is present alone in a compound. It may also be used to identify the component in some mixtures containing more than one type of rubber. In those cases, especially in mixtures where ambiguous colors are obtained, it will be necessary to use specimens that have been previously extracted with acetone.

2. SPECIMEN

2.1 The specimen should consist of at least 10 grams of the insulation or sheath compound taken from the inspection unit, prepared as described in method 7001.

3. APPARATUS AND REAGENTS

3.1 The apparatus shall be as follows:

3.1.1 Baths; ice, steam.

3.1.2 Copper wire.

3.1.3 Distillation apparatus consisting of a test tube, 10 by 75 mm., equipped with a glass condenser tube 4 mm. in outside diameter attached to the test tube by means of a cork stopper. The condenser tube shall be bent at least 90° and shall extent about 100 mm. beyond the bend.

3.1.4 Evaporating dish, 70 ml.

3.1.5 Extraction equipment, Soxhlet or similar type.

3.1.6 Funnel, separatory, 250 ml.

3.1.7 Heating element; electrically or flame heated knife, iron, or file.

3.1.8 Reflux apparatus.

3.1.9 Test tubes 16 by 150 mm. and 10 by 75 mm.

3.2 Reagents. The reagents shall be as follows:

3.2.1 B-naphthol in 5 percent sodium hydroxide solution.

3.2.2 Bromine.

3.2.3 Iodine, 0.02 gram per liter of carbon tetrachloride.

3.2.4 Mercuric acetate, 5 percent in methyl alcohol solution.

3.2.5 Petroleum ether, boiling range 30° to 60°C (86° to 140°F).

3.2.6 Phenol.

3.2.7 Sodium hydroxide, 3 and 20 percent solutions.

3.2.8 Sodium nitrate, 0.5 N solution.

3.2.9 Solution No. 1 (p-dimethylamine benzaldehyde-hydroquinone mixture). One gram of p-dimethylamine benzaldehyde and 0.01 gram of hydroquinone shall be dissolved in 100 ml. of absolute methyl alcohol. Five ml. of hydrochloric acid, specific gravity 1.19, and 10 ml. of ethylene glycol shall be added and the specific gravity adjusted to 0.851 at 25°/4°C by the addition of methyl alcohol or ethylene glycol. The solution shall be stored in a dark brown bottle. The solution is stable for several months when stored under such conditions.

3.2.10 Solution No. 2 (Metanil yellow). Two grams of sodium citrate ($Na_3C_5H_5O_711H_2O$), 0.2 gram of citric acid, 0.03 gram of Brom. Cresol green, and 0.03 gram of Metanil yellow shall be dissolved in 500 ml. of distilled water.

3.2.11 Spot test paper (chloroprene-nitrile).

3.2.11.1 Benzidine hydrochloride-hydroquinone wetting solution. Two and one-half grams of benzidine di-hydrochloride shall be dissolved in a mixture of 500 ml. of methyl alcohol and 500 ml. of water, and 10 ml. of 0.1 per cent aqueous solution of hydroquinone added. The solution shall be stored in a dark brown bottle. If protected from light and air the solution remains stable for several months. A precipitate that forms on standing does not affect the efficiency of the solution.

3.2.11.2 Test paper. Two grams of cupric acetate and 0.25 gram of Metanil yellow shall be dissolved in 500 ml. of methyl alcohol. Filter paper shall be impregnated with the solution, dried, and then cut into strips to form test paper. To conduct the test this paper shall be moistened with the wetting solution in 3.2.11.1.

3.2.12 Spot tests paper (polyisobutylene).

3.2.12.1 Mercuric oxide-sulfuric acid wetting solution. Five grams of yellow mercuric oxide shall be added to a mixture of 15 ml. of sulfuric acid, specific gravity 1.83, in 80 ml. of water, and the mixture boiled until the mercuric oxide has dissolved. The solution shall be cooled and diluted to 100 ml. with distilled water.

3.2.12.2 Test paper. Blank filter papers shall be moistened in the wetting solution described in 3.2.12.1 and then cut into strips.

3.2.13 Spot test paper (rubber-styrene).

3.2.13.1 Trichloroacetic acid-isopropanol wetting solution. Thirty grams of trichloroacetic acid shall be dissolved in isopropanol and the solution diluted to 100 ml. with the same solvent. The solution should not be allowed to come in direct contact with the skin.

3.2.13.2 Test paper. The solution shall be prepared by dissolving 3 grams of p-dimethylamine benzaldehyde and 0.05 gram of hydroquinone in 100 ml. of ethyl ether. Filter papers shall be impregnated in this solution, dried, and cut into strips. The papers shall be stored in a brown glass bottle. Papers stored under such conditions are stable for several months, but lose their efficiency if stored in the light. To conduct the test for natural rubber and styrene polymer these papers shall be moistened with the wetting solution described in 3.2.13.1.

3.2.14 Zinc, granulated.

4. PROCEDURE

4.1 Pyrolysis tests. A specimen containing about 0.5 gram of the rubber compound, free from adhering fabrics or other material, shall be transferred to the distillation tube of the distillation apparatus 3.1.3 and a condenser tube attached. The distillation tube shall be fastened in position by means of a clamp and then heated with a very low flame until the specimen begins to decompose. When vapor appears in the tube, the end of the condenser tube shall be immersed in 1.5 ml. of solution No. 2, contained in a test tube, and the distillation continued until it has been determined whether a color change will develop. The condenser tube shall then be removed from solution No. 2 and transferred to a second receiving tube containing 1.5 ml. of solution No. 1, and the distillation continued for a few minutes. The distillate in the two receiving tubes shall be cooled and shaken. The tube containing solution No. 1 shall be examined to determine whether the drops of distillate sink or float on solution No. 1. Both solutions No. 1 and No. 2 shall be observed for any color change. Solution No. 1 shall be transferred to a 16 by 150 mm. test tube, 5 ml. of absolute methyl alcohol added, the mixture heated on water bath at 100°C (212°F) for 3 minutes, and any color that develops recorded. All observations made on both solutions shall be recorded and the material classified by means of table I.

TABLE I

Material	Solution No. 1		Solution No. 2
	Initial color	Color after heating	Color
Blank	Pale yellow	Pale yellow	Green
Polyvinyl chloride	Yellow	Yellow	Red
Chloroprene	Do.	Pale yellow green	Do.
Nitrile	Orange red	Red	Green
Chloroprene-nitrile	Do.	Do.	Yellow to red
Styrene	Yellow green	Green	Green
Natural rubber	Brown	Violet blue	Do.
50 styrene-50 rubber	Olive green	Green blue	Do.
Polyisobutylene	Yellow (droplet floats)	Pale blue green	Do.
Polyvinyl acetate	Yellow	Pale yellow green	Yellow

4.2 Spot tests.

4.2.1 Chloroprene-nitrile spot test. A heating element such as a knife, file, or iron shall be heated, either electrically or by means of a gas flame, to a temperature sufficient to produce dense flames but not high enough to ignite the rubber specimen. The rubber specimen shall be pressed against the heating element until fumes are liberated. A strip of the chloroprene-nitrile test paper shall be moistened with the benzidine hydrochloride-hydroquinone wetting solution and then held in a parallel position about 5 mm. above the surface of the heating unit, which is pressed against the rubber specimen until a good color is produced on the side of the paper facing the fumes without scorching the paper of the impregnating materials.

4.2.2 Polyisobutylene spot test. This test shall be conducted as described for chloroprene-nitrile test in 4.2.1, using filter paper that has been moistened with the mercuric oxide sulfuric acid wetting solution.

4.2.3 Rubber-styrene spot test. The rubber-styrene spot test shall be conducted as described in 4.2.1, using the p-dimethylaminebenzaldehyde-hydroquinone test paper moistened with the trichloroacetic acid-isopropanol wetting solution.

4.2.4 The material tested in accordance with 4.2.1, 4.2.2, and 4.2.3, shall be classified by reference to the colors listed in table II. The chloroprene-nitrile test shall be carried out first. If both of these compounds are absent the other tests will be successful.

TABLE II

Material	Chloroprene-nitrile test	Polyisobutylene test	Rubber-styrene test
Chloroprene	Red	Blank 1	Green
Nitrile	Green	Pale brown	Yellow green
Chloroprene-nitrile mixture	Red/green	Do.	Green
Polyisobutylene	Blank 1	Yellow	Pale lavender
Natural rubber	Do. 1	Brown	Blue
Styrene	Do. 1	Do.	Blue green

1/ Blank color tests may be pale brown rather than colorless.

4.2.5 Mixtures of rubber compounds. Chloroprene-nitrile mixtures containing more than 30 percent of chloroprene rubber give a green color on the wet portion and a red color on the dry portion of the spot test paper when tested as described in 4.2.1 Chloroprene in quantities less than 30 percent cannot usually be detected in this mixture. Chloroprene polymer will not normally mask natural or polyisobutylene elastomers, but may mask a styrene polymer. Nitrile polymer will mask styrene and may also cause some difficulty in detecting natural rubber. Polyisobutylene polymers normally can be detected in the presence of moderate amounts of the other four elastomers. The chloroprene-nitrile test is not masked by the presence of the other three materials. Styrene rubber is quite difficult to detect unless alone or with only small amounts of other rubber compounds. Styrene elastomers and natural rubber together can only be identified in the range of 50-50 mixtures. These spot tests are not always sufficient for detecting all rubber compounds. However, a combination of these and the confirmatory tests, 4.3, are usually satisfactory for identifying most all mixtures of elastomers.

4.3 Confirmatory tests. These tests may be used to conform the tests made in 4.1 and 4.2.

4.3.1 Chloroprene polymers.

4.3.1.1 Iodine test. Chloroprene polymers may be distinguished from the saturated poly-vinyl type by the iodine test. A specimen of the elastomer compound shall be shaken with 2 ml. of iodine solution (0.2 gram of iodine per liter of carbon tetrachloride). The formation of a violet color which fades noticeably in 2 or 3 minutes indicates the presence of chloroprene.

4.3.1.2 Flame test. A specimen shall be burned in contact with a clean copper wire. A persistent green flame indicates the presence of chlorine-containing polymers. This test is particularly applicable for testing chlorine containing polymers in the presence of much nitrile polymer.

4.3.2 Polyvinyl acetate. A 0.2 gram specimen of the elastomer compound shall be transferred to a test tube containing 2 ml. of sulfuric acid, specific gravity 1.83, and the mixture warmed gently. If decomposition occurs polyvinyl acetate compound is indicated.

4.3.3 Natural rubber and styrene polymers.

4.3.3.1 Pyrolysis test. Alphabetic extenders, if present, may present distinction between natural rubber and styrene polymers by the pyrolysis method. These materials shall be removed from the rubber compound by extraction with alcohol. A specimen of about 1 gram shall be transferred to a Soxhlet-type apparatus containing 50 ml. of alcohol. The specimen shall be extracted for about 4 hours, at such a rate that about 3 minutes are required to empty and fill the extraction cup, then removed from the cup and dried for 1 hour at 70° ± 1°C (158° ± 2°F). The dried specimen shall be subjected to the pyrolysis test described in 4.1 and the material classified by reference to table I.

4.3.3.2 Color test for styrene polymers. The presence of styrene polymers may be further confirmed by this test. The dried specimen shall be placed in a small flask, 20 ml. of nitric acid, specific gravity 1.43, added and then refluxed for 1 hour. The refluxed mixture shall be diluted by pouring into 100 ml. of water, then extracted with 50-, 25- and 25-ml. portions of ether. The ether extracts shall be combined, washed twice with 15 ml. of water and the washings rejected. The ether solution shall be extracted with three 15-ml. portions of 5 percent sodium hydroxide, followed by extraction with 20 ml. of water, and the ether discarded. The sodium hydroxide extracts and washing shall be combined, then made just acid with hydrochloric acid, specific gravity 1.19, and 20 ml. added in excess. The solution shall be heated on the steam bath and nitro benzoic acid reduced with 5 grams of granulated zinc. The solution shall be made alkaline with 20 percent sodium hydroxide, adding sufficient excess to just dissolve the zinc hydroxide precipitate that forms. The solution shall be extracted twice with ether and the ether discarded. The aqueous solution shall be made acid with hydrochloric acid, specific gravity 1.19, cooled to room temperature, and 2 ml. of 0.5 N sodium nitrate added. The solution shall be poured into an excess of a solution of B-naphthol in 5 percent sodium hydroxide. A vivid scarlet color indicates the presence of styrene polymers in the elastomer.

4.3.3 Polyisobutylene polymers. The presence of polyisobutylene polymer may be further confirmed by the following: A bent delivery tube shall be attached to a test tube No. 1 by means of a rubber stopper. The delivery tube shall pass through a stopper almost to the bottom of the test tube No. 2 having a side arm. Test tube No. 2 shall be placed in an ice bath. A second delivery tube shall be attached to the side arm of test tube No. 2 and extended into an open test tube No. 3 containing 0.5 gram of mercuric acetate in 10 ml. of methyl alcohol. A 1-gram specimen of the rubber compound that has been extracted 4.3.3.2 shall be placed in the first test tube and heated strongly to decompose and distill off the compound into the second and third test tubes. The liquid that collects in the second test tube shall be rejected. The third test tube shall be heated to evaporate the methyl alcohol, avoiding excessive heating near the end of the evaporation. Twenty-five ml. of petroleum ether (b.p. 50° ± 10°C (122° ± 18°F) shall be added to the test tube, and the mixture boiled and filtered. The filtrate shall be evaporated to a small volume and chilled in ice to crystallize the mercury derivative. The crystals shall be dried at 35° ± 5°C (95° ± 9°F.) and the melting point determined. The derivative is believed to be methoxy-iso-butyl-mercuri-acetate with a melting point of about 55°C (131°F). The test shall be further confirmed by a mixed melting point determination with the mercury derivative of known polyisobutylene or isobutylene.

4.3.4 Polysulfide rubbers. The polysulfide rubbers are easily identified by means of odor and high sulfur content. Additional qualitative tests include the pronounced swelling action of acetone (unlike other rubbers except unvulcanized nitriles) and the extremely rapid reaction (5 to 35 seconds) at 40°C (104°F) with a mixture of equal volumes of concentrated nitric and sulfuric acids.

5. RESULTS

5.1 Unless otherwise specified in the detail specification, one specimen from each inspection unit shall be tested.

5.2 The elastomers found shall be recorded.

Section 8000

MISCELLANIOUS TESTS

Method 8011.1
18 APRIL 2014

PICKS PER INCH, BRAID

1. SCOPE

1.1 This method is intended for use in determining the number of picks per inch in the braid of insulated wire and cable. For the purpose of this method “picks per inch” is defined as the number of carriers contained in 1 inch of the braid measured lengthwise of the finished wire or cable.

2. SPECIMEN

2.1 The specimen should be a piece of the inspection unit at least 4 inches in length with braid intact, from which any covering over the braid has been removed.

3. APPARATUS AND REAGENTS

3.1 The apparatus and reagents shall be as follows:

3.1.1 A thread counter, pick glass or other suitable instrument consisting of a low power ocular mounted on a rack and pinion over a graduated scale. The position of the ocular with respect to the scale shall be indicated by a pointer.

3.1.2 Wiping cloth.

3.1.3 Alcohol or other suitable solvent.

4. PROCEDURE

4.1 Any saturants or finishing material shall be removed from the surface of the specimen by means of the cloth and solvent. The counting instrument shall be placed on the specimen so that the graduated surface is parallel to the length of the specimen. The zero graduation on the scale and the pointer shall be set on a braid intersection and the number of “carriers” over a length of 1 inch of the braid counted and the value recorded. The value obtained is the number of picks per inch.

5. RESULTS

5.1 Unless otherwise specified in the detail specification, two specimens, one from each end of the inspection unit, shall be tested.

5.2 The number of picks per inch of the braid of the inspection unit shall be the average of the results obtained from the specimens tested.

5.3 The picks per inch of the braid of the inspection unit shall be recorded to the nearest 0.1 pick.

Method 8021.1
18 APRIL 2014

CARRIERS, ENDS PER CARRIER, AND PLY OF YARNS; BRAID

1. SCOPE

1.1 This method is intended for use in determining the number of carriers, ends per carrier, and ply of yarn in the braid of insulated wire and cable. For the purpose of this method, ends, ply, ply yarn, and carrier are defined as follows: An “end” is an individual yarn. A “ply” is an individual single yarn in a ply yarn. A “ply yarn” is the product formed by twisting together two or more single yarns. A “carrier” is the yarn or combination of several yarns laid parallel in the braid by a single bobbin of the braiding machine.

2. SPECIMEN

2.1 The specimen should be a piece of the inspection unit at least 4 inches in length with the braid intact from which any covering over the braid has been removed.

3. APPARATUS AND REAGENTS

3.1 The apparatus and reagents shall be as follows:

3.1.1 A needle or other pointed instrument.

3.1.2 Wiping cloth.

3.1.3 Alcohol or other suitable solvent.

4. PROCEDURE

4.1 Any saturants or finishing materials shall be removed from the specimen by means of the cloth and solvent.

4.2 Number of carriers. The cleaned braid shall be separated for a distance of at least 1 inch of the length of the specimen. The number of carriers in the whole braid shall then be counted and the value recorded.

4.3 Ends per carrier. Several of the carriers shall be separated, the number of ends (yarns) per carrier counted, and the value recorded.

4.4 Ply of yarn. Several of the yarns shall be untwisted, the number of plies counted, and the value recorded.

5. RESULTS

5.1 Unless otherwise specified in the detail specification, one specimen from each inspection unit shall be tested.

5.2 The number of carriers in the braid, the number of ends per carrier, and the number of plies in the yarn of the inspection unit shall be the results obtained from the specimen tested.

5.3 When more than one specimen is tested, the number of carriers in the braid, the number of ends per carrier, and the number of plies in the yarn of the inspection unit shall be the average of the results obtained from the specimens tested.

5.4 The number of carriers per braid, ends per carrier, and plies per yarn of the inspection unit shall be recorded to the nearest whole number.

Method 8031.1
18 APRIL 2014

YARNS PER INCH, FIBROUS COVERING

1. SCOPE

1.1 This method is intended for use in determining the number of ends (warp yarns) per inch and the number of picks (filling yarns) per inch in woven tape of insulated wire and cable.

2. SPECIMEN

2.1 Unless otherwise specified in the detail specification, the specimen should be a piece of the tape at least 6 inches in length and the full width of the tape taken from the inspection unit.

3. APPARATUS AND REAGENTS

3.1 The apparatus and reagents shall be as follows:

3.1.1 A thread counter, pick glass or other suitable instrument consisting of a low power ocular mounted on a rack and pinion over a graduated scale. The position of the ocular with respect to the scale shall be indicated by a pointer.

3.1.2 A needle or other pointed instrument.

3.1.3 A 200 ml. beaker with cover glass.

3.1.4 Blotting paper.

3.1.5 Alcohol or other suitable solvent.

4. PROCEDURE

4.1 Warp yarns. Any saturants or finishing materials shall be removed from the specimen by means of the solvent. The specimen shall then be dried by pressing it between blotting paper and laid out smoothly on a flat surface without tension. The counting instrument shall be placed on the specimen so that the graduated edge is at right angles to the yarns to be counted. Starting with the zero graduation of the scale and the pointer flush with one of the ends (warp yarns), the number of ends (warp yarns) in a distance of 1 inch of the specimen shall be coupled and the value recorded. If the fabric is 1 inch or less in width all ends shall be counted and the results expressed as ends (warp yarns) per inch.

4.2 Filling yarns. The number of picks (filling yarns) per inch shall be determined as described in 4.1.

4.3 When more than one tape is present, each tape shall be tested separately.

5. RESULTS

5.1 Unless otherwise specified in the detail specification, two specimens, one from each end of the inspection unit, shall be tested.

5.2 The ends (warp yarns) per inch of the tape of the inspection unit shall be the average of the results obtained from the specimens tested.

5.3 The picks (filling yarns) per inch of the tape of the inspection unit shall be the average of the results obtained from the specimens tested.

5.4 The ends per inch and the picks per inch of the inspection unit shall be recorded to the nearest whole number.

Method 8033.1
18 APRIL 2014

YARNS PER INCH, VARNISHED CLOTH

1. SCOPE

1.1 This method is intended for use in determining the number of ends (warp yarns) per inch and the number of picks (filling yarns) per inch in varnished cloth used in the insulation of insulated wire and cable.

2. SPECIMEN

2.1 The specimen should be a piece of the varnished cloth at least 6 inches in length and the full width of the tape taken from a single tape layer of the inspection unit.

3. APPARATUS AND REAGENTS

3.1.1 A thread counter, pick glass or other suitable instrument consisting of a low power ocular mounted on a rack and pinion over a graduated scale. The position of the ocular with respect to the scale shall be indicated by a pointer.

3.1.2 A needle or other pointed instrument.

3.1.3 A 200-ml. beaker with cover glass.

3.1.4 Blotting paper.

3.1.5 Alcohol or other suitable solvent.

4. PROCEDURE

4.1 At least 6 inches of each tape layer shall be removed from the inspection unit. Unless otherwise specified in the detail specification, 10 percent of the tapes, but in no case less than 5 tapes shall be selected at random for test.

4.2 Warp yarns. Any saturants or finishing materials shall be removed from the specimen by means of the solvent. The specimen shall then be dried by pressing it between blotting paper and laid out smoothly on a flat surface without tension. The counting instrument shall be placed on the specimen so that the graduated edge is at right angles to the yarns to be counted. Starting with the zero graduation of the scale and the pointer flush with one of the ends (warp yarns), the number of ends (warp yarns) in a distance of 1 inch of the specimen shall be counted and the value recorded. If the fabric tape is 1 inch or less in width, all ends shall be counted and the results expressed as ends (warp yarns) per inch.

4.3 Filling yarns. The number of picks (filling yarns) per inch shall be determined as described in 4.2.

5. RESULTS

5.1 Unless otherwise specified in the detail specification, one specimen from each inspection unit shall be tested.

5.2 The ends (warp yarns) per inch of the layer of tape shall be the results obtained from the specimen tested.

5.3 The picks (filling yarns) per inch of the layer of tape shall be the results obtained from the specimen tested.

5.3.1 When more than one specimen is tested, the ends (warp yarns) per inch and the picks (filling yarns) per inch of the layer of tape shall be the average of the results obtained from the specimens tested.

5.4 The ends per inch and the picks per inch of each tape tested shall be recorded to the nearest whole number.

Method 8041.1
18 APRIL 2014

YARN SIZE, WRAP AND SERVING

1. SCOPE

1.1 This method is intended for use in determining the size of cotton yarn in cotton wraps or cotton servings of insulated wire and cable.

2. SPECIMEN

2.1 The specimen should be a piece of the covering at least 20 square inches in area taken from the inspection unit in the form of a continuous ribbon, unbroken except for binder threads.

3. APPARATUS AND REAGENTS

3.1 The apparatus and reagents shall be as follows:

3.1.1 Soxhlet extraction apparatus.

3.1.2 Oven maintained at 70° ± 2°C (158° ± 4°F).

3.1.3 Analytical balance and weights.

3.1.4 Steel scale graduated to 1/32 inch or finer or its decimal equivalent.

3.1.5 Scissors.

3.1.6 Alcohol or other suitable solvent.

4. PROCEDURE

4.1 The ends of the specimen shall be cut square, the length measured with a steel scale to the nearest 1/32 inch and the value recorded as *L*. The specimen shall be folded and transferred to an extraction apparatus.

4.2 The specimen shall be extracted with the solvent until all the saturants and finishing materials have been removed. The extraction is complete when the solvent from the siphon tube is clear. The specimen shall then be removed from the extraction apparatus and dried to a constant weight in the oven at 70° ± 2°C (158° ± 4°F). The binder threads shall be removed from the specimen, the total number of ends of yarns counted and the value recorded as *N*.

4.3 The specimen shall be conditioned for 1 hour at 65 ± 2 percent relative humidity and temperature of 70° ± 2°C (158° ± 4°F), weighed and the value recorded as *W*.

5. RESULTS

5.1 Calculation. The size of the yarn in cotton wraps or servings of the specimen shall be calculated as follows:

$$\text{Size of yarn} = \frac{0.015 \times N \times L \times P}{W}$$

where:
N=the number of ends of yarn in covering
L=the length of the specimen, inches
P=the ply of the cotton yarn
W=the weight of the specimen, grams

5.2 Unless otherwise specified in the detail specification, one specimen from each inspection unit shall be tested.

5.3 The size of the yarn in the wrap or serving of the inspection unit shall be the result obtained from the specimen tested.

5.3.1 When more than one specimen is tested, the size of the yarn in the wrap or serving of the inspection unit shall be the average of the results obtained from the specimens tested.

5.4 Yarn size of the yarn in the wrap or serving of the inspection unit shall be recorded to the nearest whole number.

Method 8111.1
18 APRIL 2014

DIRECTION OF LAY

1. SCOPE

1.1 This method is intended for use in determining the direction of twist of any helical element such as strands, conductors, tapes, cotton wraps or servings, jute bedding, armoring tape, armoring wire, jute serving, etc., of insulated wire and cable. For purposes of this specification, direction of lay is defined as the lateral direction, either right-hand or left-hand, in which an element passes over the top as it recedes from an observer looking along the axis of the wire or cable.

2. SPECIMEN

2.1 The specimen should be a piece of the inspection unit of sufficient length to include at least two spirals of the element to be tested from which any covering over the element to be tested has been removed.

3. APPARATUS AND REAGENTS

3.1 The apparatus and reagents shall be as follows:

3.1.1 Wiping cloth.

3.1.2 Alcohol or other suitable solvent.

4. PROCEDURE

4.1 The covering material shall be removed from the specimen and the elements to be examined exposed and cleaned if necessary with the solvent and cloth. The direction of lay of the element shall be recorded as right-hand or left-hand. The following definitions shall apply to the terms right-hand lay and left-hand lay:

(a) Right-hand lay. A clockwise twist of the element away from the observer.

(b) Left-hand lay. A counterclockwise twist of the element away from the observer.

5. RESULTS

5.1 Unless otherwise specified in the detail specification, one specimen from each inspection unit shall be tested.

5.2 The direction of lay of the helical element of the inspection unit shall be the result obtained from the specimen tested.

5.3 The element of the inspection unit shall be designed and its direction of lay (right-hand or left-hand) recorded.

Method 8121.1
18 APRIL 2014

COVERAGE, BRAID, METAL ARMOR

1. SCOPE

1.1 This method is intended for use in determining the coverage of braided metal armor of insulated wire and cable.

2. SPECIMEN

2.1 The specimen should be a piece of the inspection unit at least 12 inches in length from which any covering over the armor has been removed.

3. APPARATUS REAGENTS

3.1 The apparatus and reagents shall be as described in the methods referenced in 4.

4. PROCEDURE

4.1 The number of picks per inch in the specimen shall be determined as described in method 8011 and the value recorded as P.

4.2 The number of wires per carrier shall be determined as described in method 8021 and the value recorded as N.

4.3 The angle of the braid shall be determined as described in method 1631 and the value recorded as A.

4.4 The diameter of the individual braid wires shall be determined as described in method 1421 and the value recorded as d.

4.5 The diameter of the cable under the armor shall be determined as described in method 1111 for diameter over the braid and the value recorded as D.

5. RESULTS

5.1 Calculation. The coverage of the braided metal armor of the specimen shall be calculated as follows:

$$\text{Coverage, percent} = (2F - F^2) \times 100$$

where:

$$F = \frac{N*P*d}{\sin A}.$$

A=the angle of braid with axis of cable; Tan. A is 2π DP/C.
d=the diameter of individual braid wires, inch.
C=the number of carriers.
D=the diameter of cable under armor, inches.
N=the number of ends per carrier.
P=the number of picks per inch of cable length.

5.2 Unless otherwise specified in the detail specification, one specimen from each inspection unit shall be tested.

5.3 The coverage of the armor of the inspection unit shall be the result obtained from the specimen tested.

5.3.1 When more than one specimen is tested, the coverage of the armor of the inspection unit shall be the average of the results obtained from the specimens tested.

5.4 The coverage of the armor of the inspection unit shall be recorded to the nearest 1.0 percent.

Method 8131.1
18 APRIL 2014

COVERAGE, WRAP OR SERVING

1. SCOPE

1.1 This method is intended for use in determining the coverage of a cotton serving or wrap covering on insulated wire or cable.

2. SPECIMEN

2.1 The specimen should be a piece of the inspection unit of sufficient length to include at least 20 square inches of the wrap or serving from which any covering over the wrap or serving has been removed. (See methods required in 4.)

3. APPARATUS AND REAGENTS

3.1 The apparatus and reagents shall be as described in the methods reference in 4.

4. PROCEDURE

4.1 The length of lay of the serving or wrap shall be determined as described in method 1531 and the value recorded as *L*.

4.2 The angle of the serving shall be determined as described in method 1621 and the value recorded as *A*.

4.3 The total number of ends of yarn in the specimen shall be determined as described in method 8031 and the value recorded as *N*.

4.4 The yarn size shall be determined as described in method 8041 and the value recorded. The constant *D* for yarn size is given in table I.

4.5 If two wraps or servings are present, each shall be tested separately.

TABLE I

Size of yarn	Value of D
14/1 or 30/2	0.0096
12/1 or 26/2	.0105
10/1 or 20/2	.0114
12/2	.0155

5. RESULTS

5.1 Calculation. The coverage of the cotton wraps or servings of the specimen shall be calculated as follows:

$$\text{Coverage of serving or wrap, percent} = \frac{N\,D}{W} \times 100$$

where:

N=the number of ends of yarn in the specimen.

A=the angle between the yarn and axis of wire or cable.

L=the length of lay of the wrap or serving, inches.

D=the constant for yarn size (table I).

W=the equal to P Cos A.

P=the equal to L Tan A.

1.1 Unless otherwise specified in the detail specification, one specimen from each inspection unit shall be tested.

5.3 The coverage of the wrap or serving of the inspection unit shall be the result obtained from the specimen tested.

5.3.1 When more than one specimen is tested, the coverage of the wrap or serving of the inspection unit shall be the average of the results obtained from the specimens tested.

5.4 The coverage of the wrap or serving of the inspection unit shall be recorded to the nearest 1.0 percent.

Method 8211.1
18 APRIL 2014

MOISTURE ABSORPTION, INSULATION

1. SCOPE

1.1 This method is intended for use in determining the amount of water absorbed by the insulation over a conductor.

2. SPECIMEN

2.1 If the conductor size is No. 1 AWG or smaller, the specimen should consist of a piece of the inspection unit 11 inch in length from which any covering over the insulation has been removed.

2.2 If the conductor is No. 0 AWG or larger, the specimen should consist of a piece of the insulation approximately 4 inches in length, 1 inch in width, and 1/16 inch in thickness taken from the insulation of the inspection unit. The specimen should be buffed, method 3011, to remove all corrugations and when necessary to obtain a thickness of 1/16 inch.

3. APPARATUS AND REAGENTS

3.1 The apparatus and reagents shall be as follows:

3.1.1 Analytical balance and weights.

3.1.2 Cloth, absorbent gauze.

3.1.3 Dessiccator, vacuum.

3.1.4 Drying oven, ventilated, capable of maintaining the specimen at the required temperature within ± 2°C (4°F).

3.1.5 Mandrel with diameter of 4 times the overall diameter of the specimen to be tested (2.1).

3.1.6 Thermometer up to 100°C (212°F).

3.1.7 Vacuum pump.

3.1.8 Washers, nonferrous metal.

3.1.9 Water bath, capable of maintaining the specimen at the required temperature within ±2°C (4°F). The bath shall consist of vitreous-enameled-steel or glass vessel equipped with a closely fitting, sheet-metal cover plate having holes of sufficient size to accommodate the ends of the specimen. The cover shall be of corrosion-resisting metal.

3.1.10 Calcium chloride, anhydrous, for desiccant.

3.1.11 Distilled water.

3.1.12 Ethyl alcohol, 95 percent.

4. PROCEDURE

4.1 Conductor No. 1 AWG and smaller.

4.1.1 The circumference of the specimen shall be determined as described in method 1441.

4.1.2 The surface of the insulation shall be cleaned of all fibers and particles of foreign material by means of the cloth and ethyl alcohol. The specimen shall then be dried in a vacuum (pressure of approximately 20 mm of mercury) over calcium chloride at a temperature of 70° ± 2°C (158° ± 4°F) for 24 hours, cooled to room temperature in a desiccators over calcium chloride, and weighed to the nearest milligram within 3 minutes after removal from the desiccators. The drying and weighing shall be continued at 24-hour intervals until the weight is constant within 1 milligram in two consecutive weighings or until any one weight is greater than the previous weight. The lowest weight shall be recorded as W_1.

4.1.3 The specimen shall be bent in the form of a U around the mandrel which shall have a diameter four times that of the specimen. Each end of the specimen shall be inserted through a hole in the cover plate of the water bath so that 10 inches of the U-shape of the specimen shall be exposed below the plate. If the specimen does not fit the holes tightly, accurately drilled, closely fitting, nonferrous metal washers shall be used to complete the enclosure of the holes in the cover plate, and to assist in holding the specimens tightly in place.

4.1.4 The water bath shall be filled with distilled water and the cover with the specimen in place shall be placed over the bath with the U-portion of the specimen immersed in the water. The water level shall be maintained flush with the under side of the cover plate during the test, care being taken that no water comes in contact with the ends of the specimen.

4.1.5 The specimen shall be exposed in the water bath for a period of 166 hours at a temperature of 70° ± 2°C (158° ± 4°F) after which the cover plate with the specimen shall be removed from the bath and transferred to a similar vessel filled with distilled water at a temperature of 24° ± 3°C (75° ± 5°F). The specimen shall be allowed to remain in this bath for not less than 5 minutes nor more than 15 minutes. The washers shall then be carefully removed from the specimen. The specimen shall be removed from the bath and shaken to remove the loose water. The remaining surface water shall be removed by blotting the specimen lightly with clean, lintless, absorbent gauze. The specimen shall then be weighed to the nearest milligram within 3 minutes after removal from the water. This weight shall be recorded as W_2.

4.1.6 The specimen shall be dried in the vacuum, 4.1.1, over calcium chloride at a temperature of 70° ± 2°C (158° ± 4°F) for 24 hours, cooled to room temperature in a desiccators, and weighed to the nearest milligram within 3 minutes after removal from desiccators. The drying and weighing shall be continued at 24-hour intervals until the weight is constant within 1 milligram in two consecutive weighings, or until any one weight is greater than the previous weight. The lowest weight shall be recorded as W_2.

4.2 Conductor No. 0 AWG and larger.

4.2.1 The buffed specimen shall be cleaned, cooled, and the thickness determined as described in method 1124. The value shall be recorded as T.

4.2.2 The specimen shall then be weighed as described in 4.1.2 and immersed in the water bath at a temperature of 70° ± 2°C (158° ± 4°F) for a period of 166 hours. At the end of the exposure period, the specimen shall be transferred to a similar bath of distilled water at a temperature of 24° ± 3°C (75° ± 5°F). The specimen shall be allowed to remain in this bath for not less than 5 minutes nor more than 15 minutes. The specimen shall be removed from the bath and shaken to remove loose surface water. The remaining surface water shall be removed by blotting lightly with clean, lintless, absorbent gauze and the specimen weighed as described in 4.1.5. The specimen shall be dried, cooled, and weighed as described in 4.1.6.

5. RESULTS

5.1 Calculation.

5.1.1 The area of the immersed portion of the specimen shall be calculated as follows:

Conductor size No. 1 AWG or smaller:

Area, S square inches=C x L

where:
C=the circumference of specimen before bending, inches.
L=the length of the immersed specimen, inches.

Conductor size No. 0 or larger:

Area, S square inches=2(L x W)+2T(L+W)

where:
W = the width of the specimen, inch.
L = the length of the specimen, inch.
T = the thickness of the specimen after buffing, inch.

5.1.2 The moisture absorption of the specimen shall be calculated as follows:

Where the original weight W_1, is less than the final weight, W_3, of the dried specimen:

$$\text{Moisture absorption per square inch grams} = \frac{W_2 - W_1}{S}$$

Where the original weight W_1, is greater than the final weight W_3, of the dried specimen:

$$\text{Moisture absorption per square inch, grams} = \frac{W_2 - W_3}{S}$$

where:
W_1 = the original weight of specimen, grams
W_2 = the weight specimen after immersion, grams.
W_3 = the weight of the specimen after final drying, grams.
S = the area of immersed portion of specimen, square inch.

5.2 Unless otherwise specified in the detail specification, three specimens from each inspection unit shall be tested.

5.3 The moisture absorption of the insulation of the inspection unit shall be the average of the results obtained from the specimens tested.

5.4 Moisture absorption of the insulation of the inspection unit shall be recorded to the nearest 0.01 gram per square inch.

Method 8221.1
18 APRIL 2014

MOISTURE ABSORPTION, FIBROUS COVERING

1. SCOPE

1.1 This method is intended for use in determining the amount of water absorbed by the fibrous covering other than tapes over the insulation of a wire or cable.

2. SPECIMEN

2.1 The specimen should consist of a piece of the inspection unit 24 ± ¼ inch in length from which any covering over the fibrous covering to be tested has been removed.

3. APPARATUS AND REAGENTS

3.1 The apparatus and reagents shall be as follows:

3.1.1 A desiccator.

3.1.2 Analytical balance and weight.

3.1.3 Water bath equipped with a cover to keep out dust and dirt and capable of maintaining the specimen at the required temperature within ± 1°C (2°F).

3.1.4 Mandrel of the size required in table I.

TABLE I. Mandrel sizes. 1/

Size of wire, AWG, or circular mil area	Diameter of mandrel (inches)	Size of wire, AWG, or circular mil area	Diameter of mandrel (inches)
No. 14	1 3/8	450,000 cir. mils	6 5/8
No. 12	1 9/16	500,000 cir. mils	6 ¾
No. 10	1 5/8	550,000 cir. mils	10 ½
No. 8	1 ¾	600,000 cir. mils	11
No. 6	1 ¼	650,000 cir. mils	11 ¼
No. 4	1 3/8	700,000 cir. mils	11 ½
No. 2	1 9/16	750,000 cir. mils	12
No. 1	2 1/16	800,000 cir. mils	12 ¼
No. 0	2 7/8	850,000 cir. mils	12 ½
No. 00	3	900,000 cir. mils	12 7/8
No. 000	3 ¼	950,000 cir. mils	13 ¼
No. 0000	3 ½	1,000,000 cir. mils	13 ½
250,000 cir. mils	5 13/16	1,250,000 cir. mils	17 ½
300,000 cir mils	5 ½	1,500,000 cir. mils	18 ½
350,000 cir mils	5 7/8	1,750,000 cir. mils	19 ¾
400,000 cir mils	6 ¼	2,000,000 cir. mils	20 ½

1/ The values for mandrel diameter in the table apply throughout to insulated conductors having two fibrous coverings. For Nos. 14, 12, 10, and 8 AWG conductors having one fibrous covering, the mandrel diameters are to be 5/16, 3/8, 9/16 and 11/16 inch, respectively.

3.1.5 Anhydrous calcium chloride.

3.1.6 Distilled water.

4. PROCEDURE

4.1 Unless otherwise specified in the detail specification, the specimen shall be immersed in water at 21° ± 1°C (70° ± 2°F) for a period of 22 ± ¼ hour.

4.2 The specimen shall be free from mechanical damage and shall not be bent or flexed until it has reached room temperature. Handling and flexing of the specimen shall be reduced to the absolute minimum necessary in testing.

4.3 The specimen shall be bent around a mandrel of the diameter specified in table I. If the size of the wire or cable to be tested is size No. 2 AWG or smaller, as many turns shall be made about the mandrel as will permit it to conform closely to the mandrel with a 2 to 2 ½-inch straight length of the specimen at each end. The adjacent turns around the mandrel shall not touch each other and shall be 1/8 inch to ¼ inch apart. If the size of the wire or cable to be tested is larger than No. 2 AWG, a simple U-turn shall be made about the mandrel.

4.4 The specimen shall be removed from the mandrel without disturbing its form, and shall be placed in the desiccators over anhydrous calcium chloride for not less than 18 hours at room temperature. It shall then be removed from the desiccators and weighed to the nearest 10 mg. within 3 minutes and the value recorded as W_1.

4.5 The specimen shall then be immersed in distilled water for the required period of time at the required temperature with 1 inch ± 1/8 inch of each end of the coil or U-bend projecting above the surface of the water. At the end of the immersion period the specimen shall be removed from the water bath, shaken vigorously for 5 seconds to remove the adhering moisture, and weighed to the nearest 10 mg. within 2 minutes, and the value recorded as W_2.

4.6 All fibrous coverings other than tape shall then be removed from the full length of the specimen. The conductor, insulation, and tape, if any, shall then be weighed to the nearest 10 mg. and the value recorded as W_3.

4.7 The moisture absorption shall not be corrected for the portion of the specimen projecting above the surface of the water.

4.8 If at any time the water in the bath becomes dirty or shows the presence of a surface film of dust or wax, it shall be replaced with fresh distilled water.

5. RESULT

5.1 Calculation. The moisture absorbed by the fibrous covering of the specimen shall be calculated as follows:

$$\text{Moisture absorption, percent} = \frac{W_2 - W_1}{W_3 - W_2} \times 100$$

where:

W_1=weight of the dry specimen, grams.
W_2=weight of the specimen after immersion, grams.
W_3=weight of conductor, insulation, and any tape, grams.

5.2 Unless otherwise specified in the detail specification, two specimens from each inspection unit shall be tested.

5.3 The moisture absorption of the fibrous covering of the inspection unit shall be the average of the results obtained from the specimens tested.

5.4 Moisture absorption of the fibrous covering of the inspection unit shall be recorded to the nearest 0.1 percent.

5.5 The temperature and time of immersion shall be recorded.

Method 8231.1
18 APRIL 2014

INSULATION SHRINKAGE (MOLTEN SOLDER METHOD)

1. SCOPE

1.1 This method is intended for use in determining the amount of insulation shrinkage or a wire.

2. SPECIMEN

2.1 The specimen should be a 6-inch length of insulated wire.

3. APPARATUS

3.1 The apparatus shall be as follows:

3.1.1 A suitable container in which the solder may be kept.

3.1.2 Mandrels of the size specified in 4.1.

4. PROCEDURE

4.1 Before the addition of any outer coverings, a 6-inch specimen of insulated wire shall be taken from a point at least six inches from the end of an inspection unit and shall be prepared for testing by removing ½-inch of insulation at one end. At a point ½-inch from the skinned end of the wire, the specimen shall be given a 90° bend over a mandrel of its own diameter. The end shall then be immersed for 5 seconds, to within 1/8 inch of the insulation in a container of lead free solder maintained at a temperature of approximately 320°C (608°F). There shall be no flux used in preparing the wire for soldering. The insulation shall not flare away from the conductor, open up over the bent portion, nor shrink back more than that specified in the detail specification or specification sheet.

5. RESULTS

5.1 Unless otherwise specified in the detail specification or specification sheet, one specimen from each inspection unit shall be tested.

5.2 The amount of shrinkage shall be recorded.

Method 8311.1
18 APRIL 2014

WEIGHT, WIRE OR CABLE, CONDUCTOR AND COVERING MATERIAL

1. SCOPE

1.1 This method is intended for use in determining the weight of the finished wire or cable, conductor and covering materials of insulated wire and cable. It is particularly applicable to type URC weather-resistant wire or any other insulated wire or cable purchased on a weight basis.

2. SPECIMEN

2.1 The specimen should be a piece of the inspection unit at least 2 feet in length.

3. APPARATUS AND REAGENTS

3.1 The apparatus and reagents shall be as follows:

3.1.1 Steel scale graduated to 1/64 inch or finer, or its decimal equivalent.

3.1.2 Balance accurate to 0.20 gram and weights.

3.1.3 Wiping cloth.

3.1.4 Alcohol, or other suitable solvent.

4. PROCEDURE

4.1 The specimen, with ends cut squarely and smooth, shall be laid out on a smooth horizontal surface, the length of the specimen measured to the nearest 1/64 inch with steel scale, and the value recorded as *L*.

4.2 The specimen shall be weighed to within 0.20 gram and the weight recorded as *W*.

4.3 The covering shall be removed from the conductor and the conductor freed of any adhering material with the solvent and wiping cloth, weighed to within 0.20 gram, and the weight recorded as W_1.

5. RESULTS

5.1 Calculation.

5.1.1 The weight of 1,000 feet of the covering material shall be calculated as follows:

$$\text{Weight of covering material, pounds per 1,000 feet} = \frac{W-W_1}{L} \times 26{,}455$$

where:

W=the weight of the specimen in grams
W_1=the weight of the conductor in grams
L=the length of the specimen in inches

5.1.2 The weight of 1,000 feet of the conductor shall be calculated as follows:

$$\text{Weight of conductor, pounds per 1,000 feet} = \frac{W_1}{L} \times 26.455$$

5.1.3 The weight of 1,000 feet of the finished wire or cable shall be calculated as follows:

Weight finished wire or cable, pounds per 1,000 feet, =weight of covering material plus weight of conductor

5.2 Unless otherwise specified in the detail specification, one specimen from each inspection unit shall be tested.

5.3 The weight of the covering material, weight of conductor, and weight of finished wire or cable of the inspection unit shall be the result obtained from the specimen tested.

5.3.1 When more than one specimen is tested, the weight of the covering material weight of the conductor, and weight of finished wire or cable of the inspection unit shall be the average of the results obtained from the specimen tested.

5.4 The weight of covering material, weight of conductor, and weight of finished wire or cable of the inspection unit shall be recorded to three significant figures.

Method 8321.1
18 APRIL 2014

SPECIFIC GRAVITY; PYCNOMETER

1. SCOPE

1.1 This method is intended for use in determining the specific gravity of rubber insulating compounds and sheaths. It is particularly applicable when the specimen is not in the form of one solid and continuous piece. It is not as rapid as method 8322 but is considered more accurate.

2. SPECIMEN

2.1 The specimen should consist of approximately 1 gram of the insulation or sheath taken from the inspection unit.

3. APPARATUS AND REAGENTS

3.1 The apparatus and reagents shall be as follows:

3.1.1 An analytical balance and weights.

3.1.2 A pycnometer.

3.1.3 Ninety-five percent ethyl alcohol.

4. PROCEDURE

4.1 Unless otherwise specified in the detail specification, the determination shall be made at a temperature of 25° ± 0.5°C (77° ± 1°F), unless the coefficient of expansion of the rubber compound is known, in which case, the determination may be made at any convenient temperature and the value corrected to 25°C.

4.2 The specimen shall be weighed to the nearest 0.1 mg. and the weight recorded as W_1.

4.3 The pycnometer shall be filled with 95 percent alcohol, weighed to the nearest 0.1 milligram and the weight recorded as W_2.

4.4 The specimen shall then be placed in the pycnometer which shall be filled with alcohol and the whole weighed to the nearest 0.1 milligram, and the weight recorded as W_3.

5. RESULT

5.1 The specific gravity of the specimen at 25°/4° C shall be calculated as follows:

$$\text{Specific gravity } (25°/4°C) = \frac{0.9971 \times W_1}{W_1-(W_2-W_3)} \times \text{specific gravity of alcohol at } 25°/25° \text{ C}$$

where:

W_1=weight of the specimen, grams.
W_2=weight of pycnometer filled with alcohol, grams.
W_3=weight of pycnometer filled with specimen and alcohol, grams.

5.2 Unless otherwise specified in the detail specification, two specimens from each inspection unit shall be tested.

5.3 The specific gravity of the insulation or sheath of the inspection unit shall be the average of the results obtained from the specimens tested.

5.4 The specific gravity of the insulation or sheath of the inspection unit shall be recorded to the nearest 0.001 unit.

Method 8322.1
18 APRIL 2014

SPECIFIC GRAVITY; HYDROSTATIC

1. SCOPE

1.1 This method is intended for use in determining the specific gravity of rubber insulating compounds and sheaths. It is applicable to all compounds where the specimen is in one piece. It is much faster than method 8321 but is not considered as accurate.

2. SPECIMEN

2.1 The specimen should consist of approximately 1 gram of the insulation or sheath taken from the inspection unit.

3. APPARATUS AND REAGENTS

3.1 The apparatus and reagents shall be as follows:

3.1.1 An analytical balance and weights.

3.1.2 A fine wire approximately 0.004 inch in diameter for supporting the specimen.

3.1.3 Ninety-five percent ethyl alcohol.

3.1.4 Distilled water.

4. PROCEDURE

4.1 Unless otherwise specified in the detail specification, the temperature of the water during the test shall be 25° ± 0.5°C (77° ± 1°F) unless the coefficient of expansion of the material is known, in which case the determination may be made at any temperature and the value corrected to 25°C.

4.2 The specimen shall be weighed in the air and the value recorded as W_1.

4.3 The wire for suspending the specimen shall be attached to one arm of the balance, weighed in water and the value recorded as W_2 noting the depth to which the wire was immersed.

4.4 The specimen shall be dipped in alcohol and blotted dry to eliminate the formation of air bubbles when immersed in water. The specimen shall be attached to the wire, immersed in water, weighed, and the value recorded as W3. The second weighing shall be made with the wire immersed in the water to the same depth as previously without the specimen attached.

4.5 All weighings shall be made to the nearest milligram.

5. RESULTS

5.1 Calculations. The specific gravity of the specimen at 25/4°C shall be calculated as follows:

$$\text{Specific gravity (25/4°C)} = \frac{W_1}{W_1-(W_3-W_2)} \times 0.9971$$

where:
W_1=the weight of the specimen in air, grams.
W_2=the weight of the supporting wire in water, grams.
W_3=the weight of the specimen and supporting wire in water, grams.

5.2 Unless otherwise specified in the detail specification, two specimens from each inspection unit shall be tested.

5.3 The specific gravity of the insulation or sheath of the inspection unit should be the average of the results obtained from the specimens tested.

5.4 The specific gravity of the insulation or sheath of the inspection unit should be recorded to the nearest 0.001 unit.

CONCLUDING MATERIAL

CUSTODIANS:
Army – CR
Navy – AS
Air Force – 85
DLA - CC

REVIEW ACTIVITIES:
Army – AR, AT
Navy – EC, MC
Air Force – 19, 71, 99

PREPARING ACTIVITY:

DLA – CC

(Project 6145-2013-017)

NOTE: The activities listed above were interested in this document as of the date of this document. Since organizations and responsibilities can change, you should verify the currency of the information above using the ASSIST Online database at https://assist.dla.mil/.