NOTICE: When Government drawings, specifications, or other data are used for any purpose other than in connection with a definitely related Government procurement operation, the United States Government thereby incurs no responsibility, nor any obligation whatsoever; and the fact that the Government may have formulated, furnished, or in any way supplied the said drawings, specifications, or other data, is not to be regarded by implication or otherwise as in any manner licensing the holder or any other person or corporation, or conveying any rights or permission to manufacture, use, or sell any patented invention that may in any way be related thereto.

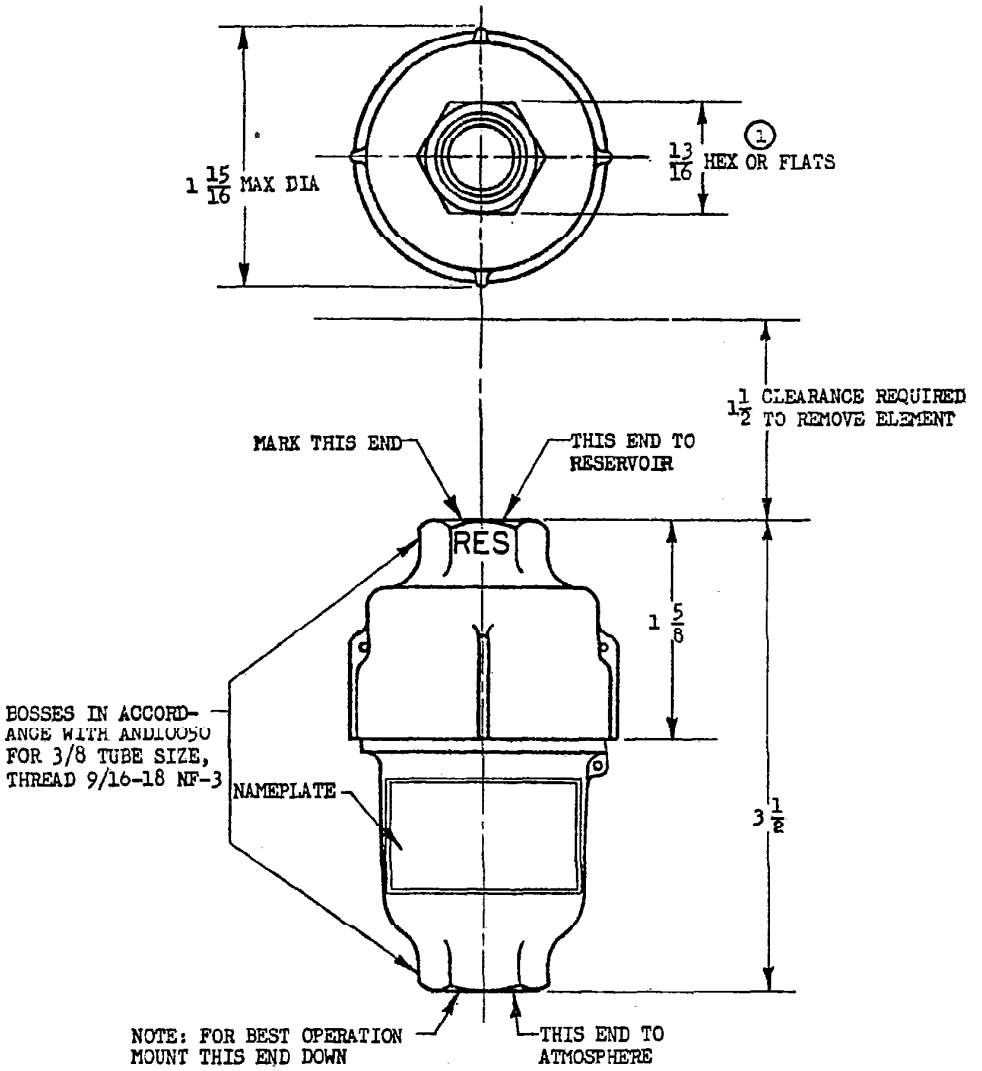

AN PART NO.	WT LB MAX
AN6240-1	0.25

FILTER INCLUDES FILTER ELEMENT AN6237-1.
DIMENSIONS IN INCHES. UNLESS OTHERWISE SPECIFIED, TOLERANCES: FRACTIONS ±1/64.
ALL JOINTS AND SEALS TO BE LOCKWIRED.

AIR FORCE
NOTE: This drawing was approved by joint action of the [redacted] and Navy Departments as the [redacted]-Navy standard for this product. This drawing supersedes all antecedent standard drawings for the same product and shall become effective for the procurement of aeronautical supplies, or for use in new designs, not later than six months after the latest date of approval shown. It may be put into effect, however, at an earlier date after promulgation.

APPROVED 25 Jul 44 REVISED 1 2 Sep 49

PROCUREMENT SPECIFICATION	AIR FORCE-NAVY AERONAUTICAL STANDARD	AN6240
AN-F-3	FILTER - HYDRAULIC REPLACEABLE ELEMENT VENT TYPE	