[INCH–POUND]
A–A–55563/7C
7 December 2016
Superseding
A-A-55563/7B
7 December 2011

COMMERCIAL ITEM DESCRIPTION
SPECIFICATION SHEET

HOLDER, ELECTRICAL CARD, METAL CARD GUIDE, OPEN ENDED, WITH FLARED ENTRY, WITH 3 MOUNTING HOLES

The General Services Administration has authorized the use of this commercial item description (CID) for all federal agencies.

The complete requirements for procuring electrical card holders described herein shall consist of this document and the latest issue in effect of A–A–55563.

CLASSIFICATION/PART OR IDENTIFICATION NUMBER (PIN). This commercial item description (CID) specification sheet uses a classification system which is included in the Part Identification Number (PIN) as shown in the following example (see notes).

AA55563	/07	@	#	$$	&
CID number	Applicable CID specification sheet	Material	Card holder width/ board thickness (see table I)	Overall length (see table II)	Finish

Example: AA55563/07AC20D is the PIN for a beryllium copper (of temper TD01), 2.0 inches (50.8 mm) long, black ebonal finished, low profile card guide with flared entry. The card guide is designed to accommodate circuit card assemblies with printed board thicknesses of .0937 inch (2.29 mm) and has two offset mounting holes.

SALIENT CHARACTERISTICS.

Interface and physical dimensions. The card holders supplied to this CID specification sheet shall be as specified herein (see figure 1, table I, and table II) and meet the general requirements specified in CID A–A–55563.

Material type. Materials types shall be defined in A–A–55563. The applicable material type designators for this CID specification are "A" (beryllium copper ¼ H, temper TD01), "B" (beryllium copper ¼ HT, temper TH01), or "D" (stainless steel ¼ H). The material type designator shall be included in the PIN.

Material thickness. The material thickness shall be .008 inch ±.002 inch (0.20 ±0.05 mm).

Card holder width/board thickness. The card holder width/board thickness shall be defined in table I herein and is shown on figure 1 as dimensions "D" and "T". The applicable card holder width/board thickness designators for this CID specification sheet are "A", "B", "C", and "D" as specified in table I and shall be included in the PIN.

Overall length. Overall length is shown on figure 1 as dimension "L", and is displayed in table II herein. Applicable overall length designator "20", "25", "30", "35", "40", "45", "50", "55", "60", "65", "70", or "75" shall be included in the PIN.

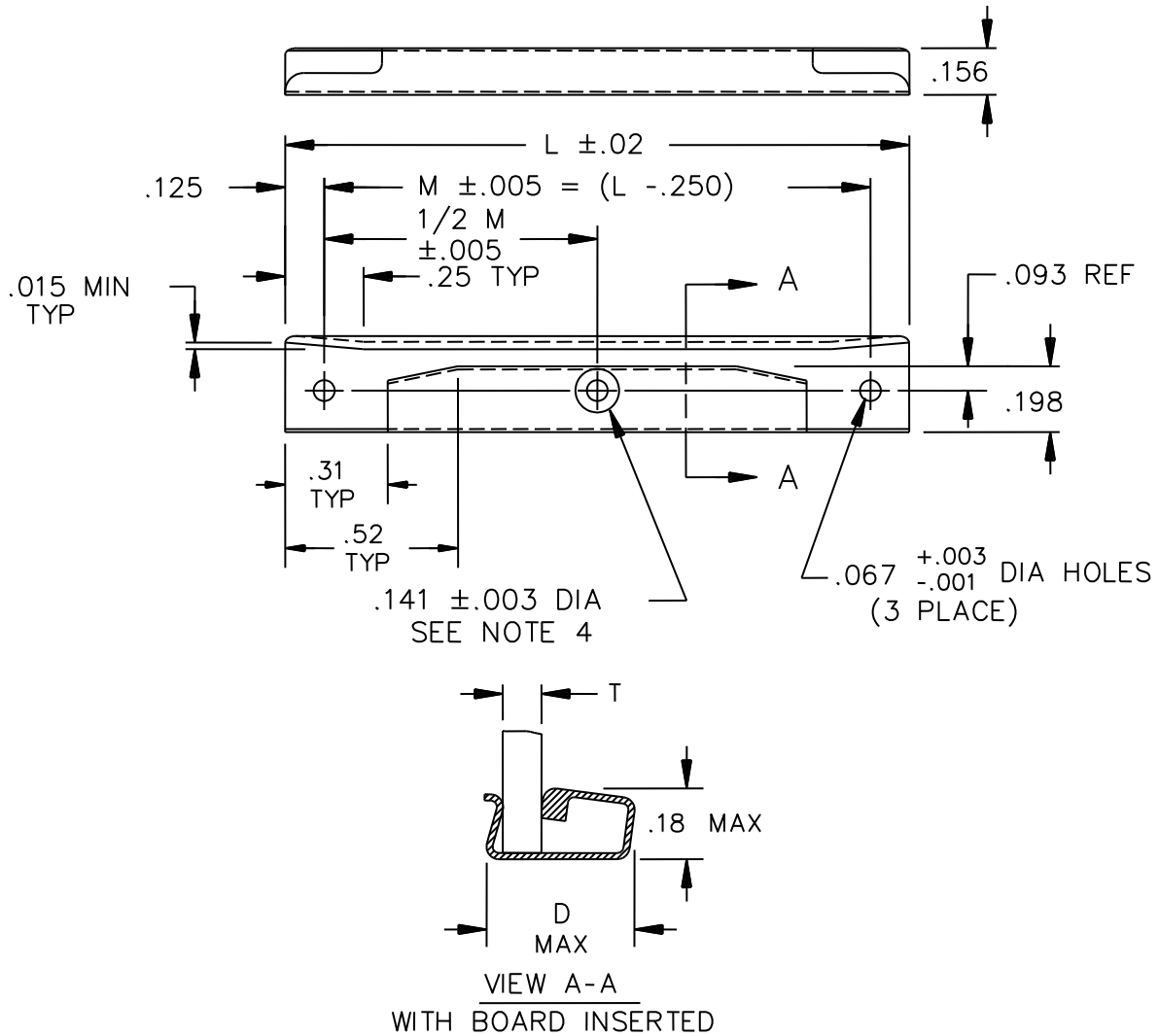

Inches	mm	Inches	mm	Inches	mm	Inches	mm	Inches	mm
.001	0.03	.015	0.38	.093	2.36	.156	3.96	.250	6.35
.003	0.08	.020	0.51	.125	3.18	.180	457	.310	7.87
.005	0.13	.067	1.72	.141	3.58	.198	5.03	.520	13.21

NOTES:

1. Dimensions are in inches. Metric equivalents are given for general information only.
2. Unless otherwise specified, tolerances are ±.02 (0.51 mm), for 2 places and ±.010 (0.25 mm), for 3 places.
3. NOTE: Center hole design is optional. Use of "D" type hole is permitted and must meet the dimensional requirements.

FIGURE 1. Card holder design and dimensions.

Finish. Finish types shall be defined in A–A–55563. Applicable finish materials designator "C" (copper plate), "D" (ebonal, black), "E" (gold plate), "F" (nickel plate), "H" (silver plate), "J" (zinc, yellow chromate), "K" (no finish), or "R" (zinc, clear chromate), or are available for material type designators "A" and "B". Finish designator "G" (passivate) is the only finish available for material type designator "D". The finish designator shall be included in the PIN.

Mounting hole spacing. Mounting hole spacing is shown on figure 1 as dimension "M". Dimension "M" is listed in table II herein.

TABLE I. Card holder configurations and dimensions (see figure 1). 1/

PIN designator for card holder width / board thickness	Fractional equivalent	Card holder width 1/ 2/ Dimension "D" max		Board thickness 1/ 2/ 3/ Dimension " T" ref	
		Inches	mm	Inches	mm
A	1/32	.36	9.14	.0312	0.76
B	1/16	.36	9.14	.0625	1.52
C	3/32	.36	9.14	.0937	2.29
D	1/8	.40	10.16	.1250	3.30

1/ Dimensions are in inches. Millimeters are given for general information only.
2/ Unless otherwise specified, tolerances are ±.02 inch (0.5 mm) for two place decimals and ±.010 (0.25 mm) for three place decimals.
3/ See dimensions "D" and "T" in view A - A of figure 1. Dimension "T" is given as reference.

TABLE II. Length and hole spacing. 1/

PIN designator for overall length	Dimension "L" ±.020 (0.51)		Dimension "M" ±.005 (0.13)		Dimension "1/2 M" ±.005 (0.13)	
	Inches	mm	Inches	mm	Inches	mm
20	2.0	51	1.75	44.5	.875	22.3
25	2.5	54	2.25	57.2	1.125	28.6
30	3.0	76	2.75	69.9	1.375	35.0
35	3.5	89	3.25	82.6	1.625	41.3
40	4.0	102	3.75	95.3	1.875	47.7
45	4.5	114	4.25	108.0	2.125	54.0
50	5.0	127	4.75	120.7	2.375	60.4
55	5.5	140	5.25	133.4	2.625	66.7
60	6.0	152	5.75	146.1	2.875	73.0
65	6.5	165	6.25	158.8	3.125	79.4
70	7.0	178	6.75	171.5	3.375	85.8
75	7.5	191	7.25	184.2	3.625	92.1

1/ Dimensions are in inches. Millimeters are given for general information only.

NOTES.

PIN. The PIN should be used for Government purposes to buy commercial products to this CID specification sheet. See the classification section for PIN format example.

Source of documents.

Commercial Item Description

A–A–55563 – Holders, Electrical Card, Metal Card Guide, General Requirements for.

(Copies of these documents are available online at http://quicksearch.dla.mil.)

Ordering data. Ordering data shall be as specified in A–A–55563.

Commercial products. As part of the market analysis and research effort, this CID specification sheet was coordinated with the following manufacturers of commercial products. At the time of CID specification sheet preparation and coordination, these manufacturers were known to have commercial products that would meet the requirements of this CID specification sheet. (NOTE: This information should not be considered as a list of approved manufacturers or be used to restrict procurement to only the manufacturers shown.)

Manufacturer CAGE	Manufacturer name and address	Manufacturer contact information
61081	Pentair Technical Products (formerly Birtcher) 7328 Trade Street San Diego, CA 92121–3410	Telephone: (858) 740–2400 Toll Free: (800) 854–7086 Facsimile: (858) 679–4555 URL: http://schroff.pentair.com
65884	Sigmation, Incorporated 4549 Gateway Circle Dayton, OH 45440–1792	Tel: (937) 435–2129 Fax: (937) 435–6375 E-mail: sigmation@ameritech.net URL: www.sigmation.com

Part number (P/N) supersession data. These CID specification sheet PINs supersede the following manufacturer's P/Ns in table III as shown. The CID PINs listed in table III cover the different lengths available. This information is being provided to assist in reducing proliferation in the Government inventory system.

TABLE III. Commercial part number supersession data.

CID PIN; AA55563/07@#$$& 1/				Manufacturers 2/	
Material type (@)	Card holder width/board thickness (see table I)	Overall length designator (see table II)	Finish (&) 3/	CAGE 61081 4/	CAGE 65884 5/
A	#	20	&	35CF–1B–T–4–F	AA55563/07A#20&
A	#	25	&	35CF–1B–T–5–F	AA55563/07A#25&
A	#	30	&	35CF–1B–T–6–F	AA55563/07A#30&
A	#	35	&	35CF–1B–T–7–F	AA55563/07A#35&
A	#	40	&	35CF–1B–T–8–F	AA55563/07A#40&
A	#	45	&	35CF–1B–T–9–F	AA55563/07A#45&
A	#	50	&	35CF–1B–T–10–F	AA55563/07A#50&
A	#	55	&	35CF–1B–T–11–F	AA55563/07A#55&
A	#	60	&	35CF–1B–T–12–F	AA55563/07A#60&
A	#	65	&	35CF–1B–T–13–F	AA55563/07A#65&
A	#	70	&	35CF–1B–T–14–F	AA55563/07A#70&
A	#	75	&	35CF–1B–T–15–F	AA55563/07A#75&
B	#	20	&	35CF–1BH–T–4–F	AA55563/07B#20&
B	#	25	&	35CF–1BH–T–5–F	AA55563/07B#25&
B	#	30	&	35CF–1BH–T–6–F	AA55563/07B#30&
B	#	35	&	35CF–1BH–T–7–F	AA55563/07B#35&
B	#	40	&	35CF–1BH–T–8–F	AA55563/07B#40&
B	#	45	&	35CF–1BH–T–9–F	AA55563/07B#45&
B	#	50	&	35CF–1BH–T–10–F	AA55563/07B#50&
B	#	55	&	35CF–1BH–T–11–F	AA55563/07B#55&
B	#	60	&	35CF–1BH–T–12–F	AA55563/07B#60&
B	#	65	&	35CF–1BH–T–13–F	AA55563/07B#65&
B	#	70	&	35CF–1BH–T–14–F	AA55563/07B#70&
B	#	75	&	35CF–1BH–T–15–F	AA55563/07B#75&

See notes at end of table.

TABLE III. Commercial part number supersession data – Continued.

CID PIN; AA55563/07@#$$& 1/				Manufacturers 2/	
Material type (@)	Card holder width/board thickness (see table I)	Overall length designator (see table II)	Finish (&) 3/	CAGE 61081 4/	CAGE 65884 5/
D	#	20	G	35CF–1CR–T–4–1	AA55563/07D#20G
D	#	25	G	35CF–1CR–T–5–1	AA55563/07D#25G
D	#	30	G	35CF–1CR–T–6–1	AA55563/07D#30G
D	#	35	G	35CF–1CR–T–7–1	AA55563/07D#35G
D	#	40	G	35CF–1CR–T–8–1	AA55563/07D#40G
D	#	45	G	35CF–1CR–T–9–1	AA55563/07D#45G
D	#	50	G	35CF–1CR–T–10–1	AA55563/07D#50G
D	#	55	G	35CF–1CR–T–11–1	AA55563/07D#55G
D	#	60	G	35CF–1CR–T–12–1	AA55563/07D#60G
D	#	65	G	35CF–1CR–T–13–1	AA55563/07D#65G
D	#	70	G	35CF–1CR–T–14–1	AA55563/07D#70G
D	#	75	G	35CF–1CR–T–15–1	AA55563/07D#75G

1/ At sign (@) denotes material type, pound sign (#) denotes card holder width/board thickness, dimension "D" (see figure 1 herein), dollar signs ($$) denotes overall length dimension "L" (see figure 1 herein, and A–A–55563), and the ampersand (&) denotes finish.

EXAMPLE: PIN AA55563/07AC20D represents a metal card guide, open ended, with flared entry, with 3 mounting holes; base material is beryllium copper 1/4 hard; card holder width/board thickness, dimension "D", is .33 inch (8.38 mm), dimension "T" is .0937 inch (2.29 mm), commonly known as having a board thickness of "3/32" the overall length is 2.0 inches (50.80 mm), dimension "L"; and the finish is black ebonal.

2/ The manufacturer's P/N shall not be used for procurement to the requirements of this CID specification sheet. At the time of preparation of this CID, the aforementioned commercial products were reviewed and could be replaced by the CID PINs shown. For actual part marking requirements, see the marking paragraph of A–A–55563.

3/ Finish materials designator "C", "D", "E", "F", "H", "J", "K", or "R" are available for this material type (see finish for a description of the designators).

4/ MFG CAGE 61081 the series type is "35CF–1", (with center mounting hole and flare) the letters "B", "BH", or "CR" denotes material type, the letter "T" denotes card holder width/board thickness, the numbers "4" through "15" denotes card holder lengths, and the letter "F" denotes finish material.

5/ MFG CAGE 65884 catalog PIN's are the same as this CID sheet. The character "#" denotes the card holder width/board thickness and needs to be replaced with the appropriate PIN designator from table I. The character "&" finish material and shall be replaced with the appropriate PIN designator (see finish). See 1/ above.

Guidance on use of alternative parts with less hazardous or non–hazardous materials. This CID specification sheet provides for a number of alternative plating materials via the PIN. Users should select the PIN with the least hazardous material that meets the form, fit, and function requirements of their application.

Changes from previous issue. The margins of this specification are marked with vertical lines to indicate where changes from the previous issue were made. This was done as a convenience only and the Government assumes no liability whatsoever for any inaccuracies in these notations. Bidders and contractors are cautioned to evaluate the requirements of this document based on the entire content irrespective of the marginal notations and relationship to the last previous issue.

MILITARY INTERESTS:

Custodians:
Navy – EC
Air Force – 99
DLA – CC

CIVIL AGENCY COORDINATING ACTIVITY:

GSA – FAS

Preparing Activity

DLA – CC

Project 5998–2017–007

NOTE: The activities listed above were interested in this document as of the date of this document. Since organizations and responsibilities can change, you should verify the currency of the information above using the ASSIST Online database at https://assist.dla.mil.