ENGINEERING PRACTICE STUDY

PROJECT NUMBER: 5961-2008-046

TITLE: REVIEW OF REQUIREMENTS FOR MIL-STD-750 TEST METHOD 2101

5 November 2010

FINAL REPORT

Prepared by:

Kyle Carpenter

ATTCH 1

I. OBJECTIVES: To solicit input from custodians, review activities, users (G-12), and manufacturers (JC-13.1) on this proposal for coordination and concurrence.

II. BACKGROUND: Recent studies presented by JC-13.1 members have suggested that additional requirements be added as failure criteria to MIL-STD-750, Test Method 2101. The following additional requirements are being proposed:

a) The use of MIL-STD-750, test method 1071, conditions C & D has been prohibited.
b) A requirement to re-screen devices which have been immersed in fluorocarbon leak testing fluid to MIL-STD-750, test method 1071, 17.d has been included.
c) An allowance to use thermal impedance testing to validate the integrity of die attach in lieu of using this test method has been included.
d) An allowance for cracks or chip outs located on the opposite side of the die active area has been included.
e) Typical die attach percentages have been replaced with minimum die attach percentages.

III. RESULTS: Final results of this effort along with recommendations and conclusions are documented in attachment 1.

IV. CONCLUSIONS: The noted changes (attachment 1) shall be incorporated in the next revision of MIL-STD-750.

V. RECOMMENDATIONS:

a) All essential comments must be accepted or resolved through the DLA Land and Maritime spokesmen to the committees generating the drafts of those industry standards.
b) All suggested comments should be addressed by the industry committees or authors responsible for the draft documents.

METHOD 2101.2

DESTRUCTIVE PHYSICAL ANALYSIS FOR DIODES

1. Purpose. This test method describes detail procedures and evaluation guidelines for the destructive physical analysis (DPA) of commonly specified diodes. It is intended to provide techniques for determining compliance with specified construction requirements, as well as for evaluating processes, workmanship, and material consistency of the product in relation to MIL-PRF-19500 requirements.

2. Scope. This method pertains to all diode constructions including metal can, except where the die is encapsulated in a package normally specified for transistors. Diodes in transistor packages shall be evaluated using method 2102.

3. Sampling. Sampling for DPA shall be as specified in the applicable diode specification sheet or acquisition procedure requirements, by contract. Destructive analysis shall be totally compliant with the specification sheet for electrical and mechanical requirements or as otherwise specified in the acquisition requirements.

4. Procedure. The DPA samples shall be subjected to all procedures specified by the contract which are applicable to the device construction. ~~If a device does not conform to the specific requirements herein, or contains systemic anomalies known to directly affect reliability, the disposition of the lot shall be according to contract. Random anomalies detected when devices are subjected to tests or examinations which are additional, or more rigorous than those in the detail specification, for the product assurance level being inspected, shall be noted in the report but shall not cause the lot to be considered nonconforming.~~ The organization (contractor, subcontractor, or independent test lab) conducting the DPA test should contact the manufacturer of the product and supply a list of test methods to be used during DPA test.

a. If a device does not conform to the specific requirements herein, or contains systemic anomalies known to directly affect reliability, the disposition of the lot shall be according to contract. The manufacturer should be notified when anomalies occur, prior to continuing to the next DPA test, in order to address the findings in real time and propose any recommendations.

b. Random anomalies detected when devices are subjected to tests or examinations which are additional, or more rigorous than those in the specification sheet, for the product assurance level being inspected, shall be noted in the report but shall not cause the lot to be considered non-conforming.

TABLE 2101-I Mandatory procedures. 1/

Techniques	See
Electrical testing in accordance with group A, subgroup II of detail specification	4.3
Electrical testing in accordance with group A, subgroups III and IV and design ratings	4.4
External visual	4.5
Radiographic inspection	4.6
Hermetic seal	4.7
Hermetic seal for polymeric encapsulated devices such as bridge assemblies which contain hermetically sealed diodes shall be performed after the removal of the encapsulant	4.8 and 5.4
PIND testing	4.9
Residual gas analysis	4.10
For transparent diodes, internal visual inspection	4.11
Axial lead tensile test	4.12
Resistance to solvents	4.13
Solderability	4.14
Terminal strength	4.15
Decap analysis	5

1/ A list of techniques to be tailored for DPA performance according to the end item mission requirements and appropriate to the device construction. The tests required from this list shall be specified in the contract.

4.1 General. DPA status shall be completely documented in a report containing the following required information:

a. PIN and MIL-PRF-19500 reliability level.

b. Device manufacturer.

c. Lot date code.

d. When applicable and where acquired, an order.

e. Sample size for each test.

f. Results of each test.

g. Stamp or signature of analyst for each test.

h. Shipment quantity represented by the DPA.

i. Radiographs, one of each required view.

j. PIND, sample size, and results.

k. Photographs including one of entire device excluding leads.

l. One copy of electrical data.

m. One copy of all mechanical dimensions data.

n. When applicable, MIL-STD-750 test method number.

o. Destruct sample evidence will remain with lot.

4.2 Tests. For MIL-PRF-19500 products, the test methods specified herein shall be performed by specific MIL-PRF-19500 qualified manufacturers, their customers, or approved sources appearing on the DSCC lab suitability list.

4.3 Electrical and mechanical verification.

a. Group A, subgroup 2 inspections for room temperature dc tests shall be performed prior to DPA to verify electrical compliance of the sample. Variables data shall be taken and remain as part of the record for the lot.

b. Package dimensions as described in the outline drawing shall be measured and recorded when required. Variables data from incoming or source inspection may be used to satisfy certain requirements of this procedure if the requirements of 4.2 herein are met and the contracting parties are in agreement.

4.4 Optional electricals. Optional electrical tests such as group A, subgroup 3 of MIL-PRF-19500 for high and low temperature and subgroup 4 for dynamic characteristics may be performed. Additional design capability tests from the specification sheet; such as surge current, transient thermal resistance, and temperature coefficient may be performed. These will be specified by the contract.

4.5 External visual. External visual shall be performed according to method 2071. All text on the device body shall be recorded. If the identifier BeO is found, the manufacturer shall be contacted for information regarding alternative decap techniques.

4.6 Radiography inspection. Radiographic inspection shall be performed in accordance with method 2076.

4.7 Hermetic seal. Hermetic shall be performed. Devices shall be subject to gross and fine leak in accordance with method 1071. Gross leak conditions C and D are strictly prohibited. Any devices previously testing with fluorocarbon leak test fluid shall only be re-tested in accordance test method 1071,17.d.
Omit the fine leak requirement for double plug construction type diodes. Substitute gross leak, condition E, as applicable, for double plug types and method 2068 for double plug opaque glass body types. Paint shall be removed prior to subjecting glass devices to hermetic seal evaluations.

4.8 Hermetic seal for polymeric encapsulated devices. Hermetic seal for polymeric encapsulated devices such as bridge assemblies, which contain hermetically sealed diodes, shall have the diodes evaluated after removal of the encapsulant (see 5.4 herein).

4.9 PIND testing. PIND testing shall be performed on devices with internal die cavities to method 2052, condition A.

4.10 Water vapor testing. Water vapor testing to method 1018 shall be performed on additional unopened devices to one of the three allowed procedures if it has been determined after delidding (see 5.3 herein) that corrosion or potentially corrosive elements such as chlorine or potassium salts are present in the cavity.

4.11 Internal visual. Internal visual shall be performed prior to any destructive procedures for diodes of clear glass construction. Criteria shall be in accordance with method 2074. Opaque or metal can construction shall be evaluated for internal features after the decap procedure (see 5. herein).

4.12 Axial lead tensile test. Axial lead tensile strength shall be tested in accordance with method 2005.
4.13 Resistance to solvents. Resistance to solvents shall be performed in accordance with method 1022.

4.14 Solderability. Solderability shall be performed on "as received" devices within 30 days of receipt according to method 2026. Care in handling shall be exercised to prevent lead surface contamination prior to and during this test.

4.15 Terminal strength. Terminal strength shall be performed in accordance with method 2036.

5. Decap analysis. Decapping techniques for die inspection and die bond analysis shall be performed. (All inspections requiring an intact diode shall be completed at this point.)

5.1 Axial lead or surface mount construction.

a. The diode shall be encapsulated longitudinally in a mounting compound suitable for use as a carrier for further sample processing. The mounting compound will be selected to have expansion and contraction properties as close as possible to the device body encapsulant to prevent the generation of stress cracks in sample preparation.

b. For clear glass construction the sample shall be positioned in such a way that one side of the die is parallel to the sectioning apparatus (see figure 2101-1). This will assure that polishing of the cross section will reveal areas from which approximate dimensions may be determined.

c. The sample shall be sectioned using a laboratory grade grinding and lapping table. Precautions shall be taken to prevent damage to the sample by overly aggressive grit paper selection. In the case of cavity type constructions, the process of grinding shall stop immediately upon opening the cavity to allow for the insertion and curing of clear backfilling compound material. This is done to assure that the internal constituents of the assembly are encased and protected from damage to the die as the grinding process continues.

d. The DPA sample may be polished and stained to enhance construction details at one or several planes. The specimen will be recorded by photomicroscopy when it is determined that the center of the die has been reached (see figure 2101-1). Two photographs will be taken; one containing means for dimensioning the image, or the optical magnification shall be indicated.

e. Due to the brittle characteristics of the various materials in the construction method, damage may be induced by the sectioning technique. For glass diodes with metallurgical bond, die, or glass cracks, damage may be induced as the compression built into the seal is relaxed as the structure is weakened in the cross sectioning process. This method may not be used for disposition of metallurgical bond voids, thermal impedance may be substituted for this method to validate the integrity of die attach.

f. Cracks or chip-outs found on the opposite side of the die active area are acceptable as long as they meet the die criteria of Method 2073 and 2074, of MIL-STD-750.

5.2 Scribe, break and dig method for glass axial lead and surface mount types.

a. In this method the device is deliberately destroyed to allow visibility to the die attachment area.

b. The diode body is scored circumferentially at the location of the die plane (see figure 2101-2). This is usually accomplished with a diamond scribe. The device is then snapped into two pieces. (Observe eye protection against glass particles). Alternatively the glass body may be chemically dissolved and the die snapped (provided the die and die metallization are not attacked by the chemical that can be a common problem with this alternative). At this time the two plug surfaces may be inspected for both silicon and die metallization residue.

c. The silicon remaining on each plug may be chemically removed to provide visibility to the attachment interface materials or by further scraping or digging through all of the bond interfaces; however, this step is not mandatory. Photographs will be taken of both separated attachment surfaces. A means may be provided in the photo to dimension the image.

5.2.1 Die bond evaluation. Metallurgically bonded construction types shall be evaluated to the requirements of A.3.19 ~~30.14~~ of MIL-PRF-19500. Both separated contact interfaces shall be optically evaluated for the bond area in accordance with table 2101-II (die attach criteria). ~~If a device does not satisfy the die attach criteria, as specified, a thermal transient response test (method 3101, MIL-STD-750) shall be performed, on a sample basis to establish acceptability for use.~~

If a device does not satisfy the die attach criteria, as specified, a thermal transient response test (Method 3101, of MIL-STD-750) already performed during 100% screening shall be used as a basis to establish acceptability for use. If device serialization is required, the manufacturer shall show evidence of the device thermal transient results.

Voltage clamping testing shall be used in lieu of thermal transient for bipolar devices or when thermal transient is not required in the specification sheet.

TABLE 2101-II. Die attach criteria.

Construction	Percent design contact area to be bonded (~~typical~~ minimum)
Category I: Eutectic, thermally matched	80
Category II: Solder	50
Silver button with braze 1/	25
Category III: Silver button side	Unspecified
Back side 2/	10
Category III: Low Voltage Zeners and Schottky~~, and rectifier~~ devices as applicable 3/	0 (Pressure bonds)

1/ Dumet silver button design contact area is the entire button top view area in intimate contact with the plug or braze preform interface. When both sides of the die are adequately bonded, the button to silicon interface (the area from which silver has grown, but not including any area which may be expanded over protective oxides) may become the area where separation occurs using the scribe and break technique to open the glass. The button to silicon interface will then become the measured design contact area. The percent bond area will be determined by the silicon pulled and remaining on the backside of the button.

2/ Dumet silver button construction: The percent area requirement applies only to the back contact or silicon side. The button to plug interface shall be bonded at point of contact or the tangent formed at their interface.

3/ The requirements of 5.2.1 do not apply for thermally matched noncavity category III construction.

5.3 Stud mount or axial lead metal can.

a. Determine internal construction techniques from construction documentation or radiographic inspection.

b. For crimp construction, encapsulate one device in a specimen mounting compound suitable for grinding, lapping, and polishing procedures. Section the crimp perpendicular to the longitudinal axis to the point where the crimp is made (as determined from the construction details in the drawings or radiographic image) and determine the quality of the mechanical attachment process (see figure 2101-3).

c. This same sample may be used to observe the construction and dimensions of the internal elements. This will be accomplished by cross section of the device along the longitudinal axis and backfilling the internal cavity with epoxy as soon as the case is penetrated to prevent damage in the grinding operations to follow. Section the device to the approximate center of the die by carefully examining the device at various planes and reducing the grit abrasiveness to limit sectioning damage. Polish and stain the sample to enhance die construction. Then photograph the internal elements.

d. To view all internal surfaces, unmounted samples shall be delidded by cutting the crimp terminal just below the mechanical attachment then removing the lid by cutting circumferentially with a delidding device above the seating flange (see figure 2101-3). Care must be taken to prevent damage to the post connection at the top of the die when delidding.

e. The device shall be evaluated for die attachment position, die to preform and header interface, die topography, and post or "C" bend attachment. Photographs of internal construction will be made.

f. Bond strength testing using method 2037 is optional for construction with metal clips or wires.

g. When practical, die shear or punch testing for metal cans shall be in accordance with method 2017.

5.4 Plastic encapsulated assemblies.

a. Complex devices such as bridges containing several discrete devices shall be evaluated externally for all major features as applicable and described above for individual devices.

b. Internal construction shall be evaluated by removing the device encapsulating material with appropriate reagents using standard laboratory practice. Where uncertainty about the destructiveness of chemicals exists on internal construction elements, experiments on electrical rejects should occur or the manufacturer should be contacted for guidance.

c. Individual diode placement and method of attachment to assembly terminals shall be evaluated. Attention shall be focused on internal conductor diameters and minimum bridging distance of electrically isolated points.

d. Individual discrete diodes shall be removed from the assembly in a manner which does not impart mechanical shock or overtemperature conditions. They shall be evaluated according to the method appropriate to their construction as specified in the appropriate method herein.

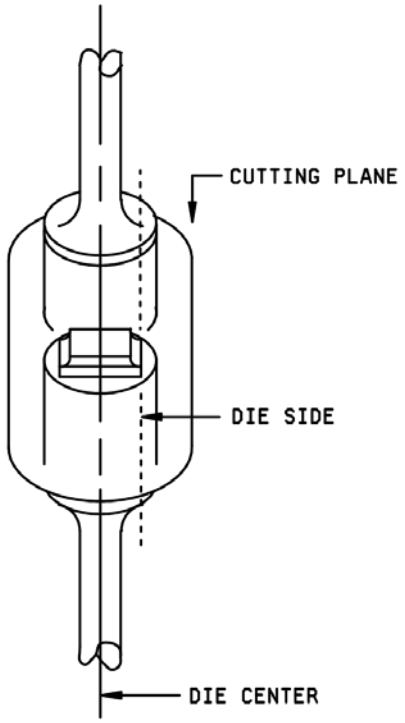

FIGURE 2101-1. Axial lead or surface mount construction.

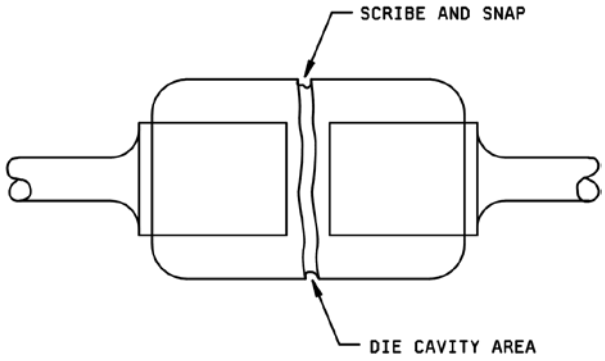

FIGURE 2101-2. Axial lead or surface mount construction.

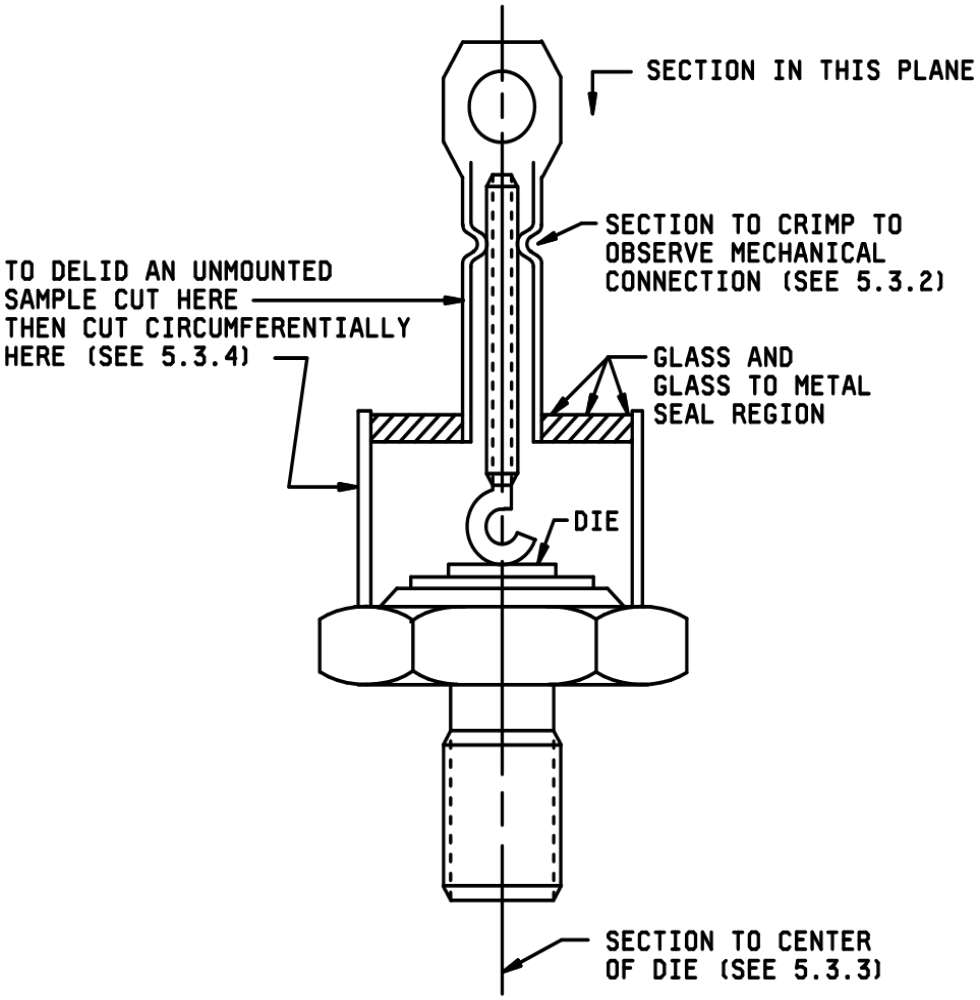

FIGURE 2101-3. Stud package.