ENGINEERING PRACTICE STUDY

PROJECT NUMBER: 5961–2016–029

TITLE:

MIL–STD–750–4, TEST METHOD 4011: PROPOSED REVISION TO CLARIFY THE TESTING PROCEDURES, ADDRESS AUTOMATIC TEST EQUIPMENT AND REFORMAT CONTENT

01 JULY 2016

FINAL REPORT

STUDY CONDUCTED BY

DLA LAND AND MARITIME
DOCUMENT STANDARDIZATION DIVISION (VA)
ACTIVE DEVICE BRANCH (VAC)

Prepared by:
David Corbett
Electronics Engineer
Active Devices Branch

Approved by:
Thomas Hess
Chief
Active Devices Branch

ATTCH 3

I. OBJECTIVES: The objective of this Engineering Practice Study (EPS) was to obtain concurrence or comments from the military services, device manufacturers, laboratories, and user community concerning the proposed revision to test method 4011 of MIL–STD–750–4 (see attachments 1 and 2).

II. BACKGROUND: Test method 4011 of MIL–STD–750–4 had not been thoroughly reviewed for updating for a number of years. The current revision, 4011.5 (attachment 3), was last updated with the issuance of change 1 to MIL–STD–750–4 on 15 August 2014 and the changes made at that time were only editorial in nature.

The initial draft of this EPS was coordinated to the FSC 5961 community and DLA Land and Maritime had requested that those activities that have an interest in test method 4011 to review the proposed revision. This proposed revision includes both format and technical content changes.

III. RESULTS: The responses to the initial draft of this EPS all concurred with the format and technical changes in proposed revision of test method 4011.

IV. CONCLUSIONS: The format and technical changes to test method 4011, as documented in attachment 1, should be proposed for incorporation into the next standardization document change action to MIL–STD–750–4.

V. RECOMMENDATIONS: DLA Land and Maritime – VAC recommends that after this EPS final report has been reviewed and accepted by the activities that submitted responses, a formal initial draft of MIL–STD–750–4 should be coordinated with using attachment 1 as the draft of test method 4011.6.

The point of contact for this final report is Mr. David Corbett, DLA Land and Maritime – VAC, P. O. Box 3990, Columbus, OH 43218-3990. Mr. Corbett can also be reached at 614-692-0526 / DSN 850-0526, or by facsimile 614-693-1642 / DSN 850-1642, or by e-mail to: 750.TestMethods@dla.mil.

This draft, dated 01 March 2016, prepared by DLA-CC, has not been approved and is subject to modification.
DO NOT USE PRIOR TO APPROVAL. Text that is highlighted in yellow has been added.

METHOD 4011.6

FORWARD VOLTAGE

1. Purpose. The purpose of this test method is to measure the voltage across the device when a specified current flows through the semiconductor device in the forward direction.

2. Applicability. This test method has three different conditions: A, B, and C. A summary of each condition is as follows:

Condition A uses a dc forward current to stimulate the device under test (DUT) and the resulting forward voltage is measured. The measurement is typically performed under conditions of thermal equilibrium and thermal management is usually necessary.

Condition B uses a forward current pulse of specified duration to stimulate the DUT and the resulting forward voltage is measured. In order to avoid significant heating of the junction during the test for forward voltage, the width of the current pulse used to make the measurement should not exceed 8.3 milliseconds and the repetition rate of the pulses should be low enough to impose a duty cycle of no more than 2 percent. Thermal management is generally unnecessary.

Condition C uses a curve tracer to stimulate the DUT. The forward voltage can be determined by observing the curve tracer waveform at the specified forward current.

3. Definitions, symbols, and terms. The following definitions, symbols, and terms shall apply to this test method.

3.1 Symbols. The following symbols shall apply for the purpose of this test method:

I_F Forward current (dc).

R Resistance (Ω).

V_F Forward voltage (dc).

V_{FM} Maximum (peak) forward voltage.

3.2 Forward voltage. A forward voltage across a diode is defined as positive anode-to-cathode voltage.

3.3 Maximum (peak) forward voltage. The value of maximum instantaneous forward voltage measured under specified conditions of temperature and forward current.

4. General requirements.

4.1 Apparatus. The apparatus used to determine the forward voltage shall be capable of applying the specified current to the DUT and measuring the resulting parameters. The apparatus required for this test method shall include the test circuit shown on figure 4011–1 and the following as applicable to the specified test condition:

a. Ammeter. Required for condition A only.

b. Curve tracer. The curve tracer shall be a Tektronix Type 576 or equivalent. Required for condition C only.

c. Oscilloscope or automatic test equipment (ATE). Required for conditions B and C only.

d. Pulse generator or electronic switch. Required for condition B only.

e. Resistor (R).

f. Variable voltage source.

g. Voltmeter.

4.1.1 Automatic test equipment (ATE). When used, ATE test instrumentation shall be capable of establishing the required test conditions and measuring the required electrical parameters to perform the specified forward voltage tests.

4.1.2 Electronic switch or pulse generator. When specified, switch SW1 as shown in the test circuit (see figure 4011–1) shall consist of either an electronic switch or a pulse generator to provide pulses of short-duty cycle to minimize device heating.

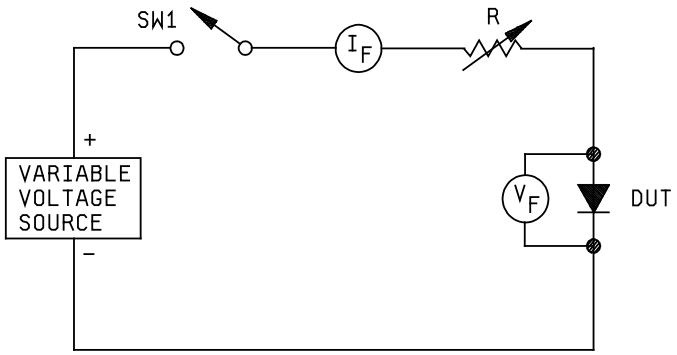

FIGURE 4011–1. Test circuit for forward voltage.

4.2 Procedure.

4.2.1 Condition A (dc method). The specified dc forward current I_F shall be applied to the DUT by varying either the variable voltage source or the resistor (R) of the test circuit. The forward current I_F shall be measured using an ammeter. The forward voltage V_F shall be measured using a dc voltmeter. The voltmeter connections shall be made at specified points on the DUT (see figure 4011–1) and always within the current connection points.

4.2.2 Condition B (pulse method). The specified forward current I_F pulse shall be applied to the DUT by adjusting the pulse generator or electronic switch or by programming the automatic test equipment (ATE) to achieve the specified amplitude, frequency, and pulse width values (see 6.a.2). An oscilloscope or ATE shall be used to measure the pulse characteristics. After adjusting pulse level to the correct value for the required forward current I_F, measure forward voltage V_F.

4.2.3 Condition C (curve tracer method). The DUT shall be tested by applying a positive voltage to the anode and limiting the current to within the manufacturer's ratings for forward current I_F. The forward voltage V_F shall be determined by observing the curve tracer waveform at the specified forward current I_F.

5. Measurements. The following measurement shall be made:

a. The forward voltage (V_F).

5.1 Details for conditions A and C. When dc techniques are used, device thermal equilibrium shall be achieved before the measurements are made.

5.2 Details for condition B. When pulse techniques are used, suitable peak reading methods shall be used to measure the parameters of pulse amplitude, frequency, duty cycle, and pulse width.

6. Summary. The following test conditions shall be specified in the applicable performance specification sheet or acquisition document:

a. Test condition letter.

1) For condition A, the test time shall be specified. If thermal equilibrium is required, the case or lead temperature shall also be specified.

2) For condition B, the pulse width.

b. Forward test current (I_F).

This draft, dated 01 March 2016, prepared by DLA-CC, has not been approved and is subject to modification. DO NOT USE PRIOR TO APPROVAL. Text highlighted in yellow has been added and ~~red text with strike-out~~ and highlighted in blue will be deleted.

METHOD 4011.~~5~~6

FORWARD VOLTAGE

1. Purpose. The purpose of this test method is to measure the voltage across the device when a specified current flows through the semiconductor device in the forward direction.

2. Applicability. This test method has three different conditions: A, B, and C. A summary of each condition is as follows:

Condition A uses a dc forward current to stimulate the device under test (DUT) and the resulting forward voltage is measured. The measurement is typically performed under conditions of thermal equilibrium and thermal management is usually necessary.

Condition B uses a forward current pulse of specified duration to stimulate the DUT and the resulting forward voltage is measured. In order to avoid significant heating of the junction during the test for forward voltage, the width of the current pulse used to make the measurement should not exceed 8.3 milliseconds and the repetition rate of the pulses should be low enough to impose a duty cycle of no more than 2 percent. Thermal management is generally unnecessary.

Condition C uses a curve tracer to stimulate the DUT. The forward voltage can be determined by observing the curve tracer waveform at the specified forward current.

3. Definitions, symbols, and terms. The following definitions, symbols, and terms shall apply to this test method.

3.1 Symbols. The following symbols shall apply for the purpose of this test method:

I_F Forward current (dc).

R Resistance (Ω).

V_F Forward voltage (dc).

V_{FM} Maximum (peak) forward voltage.

3.2 Forward voltage. A forward voltage across a diode is defined as positive anode-to-cathode voltage.

3.3 Maximum (peak) forward voltage. The value of maximum instantaneous forward voltage measured under specified conditions of temperature and forward current.

4. General requirements.

4.1 Apparatus. The apparatus used to determine the forward voltage shall be capable of applying the specified current to the DUT and measuring the resulting parameters. The apparatus required for this test method shall include the test circuit shown on figure 4011–1 and the following as applicable to the specified test condition:

a. Ammeter. Required for condition A only.

b. Curve tracer. The curve tracer shall be a Tektronix Type 576 or equivalent. Required for condition C only.

c. Oscilloscope or automatic test equipment (ATE). Required for conditions B and C only.

d. Pulse generator or electronic switch. Required for condition B only.

e. Resistor (R).

f. Variable voltage source.

g. Voltmeter.

4.1.1 Automatic test equipment (ATE). When used, ATE test instrumentation shall be capable of establishing the required test conditions and measuring the required electrical parameters to perform the specified forward voltage tests.

4.1.2 Electronic switch or pulse generator. When specified, switch SW1 as shown in the test circuit (see figure 4011–1) shall consist of either an electronic switch or a pulse generator to provide pulses of short-duty cycle to minimize device heating.

~~2. Test circuit. See figure 4011–1.~~

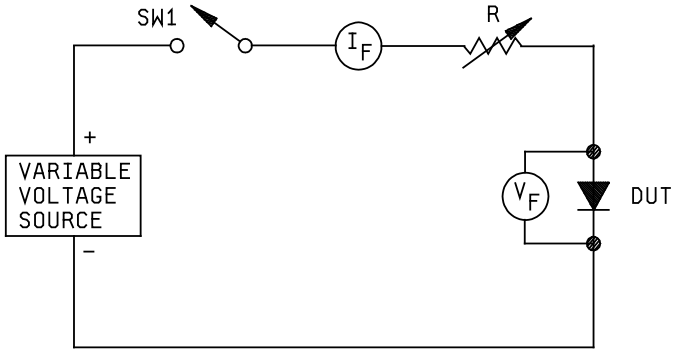

~~NOTE: When specified, switch SW1 shall consist of either an electronic switch or a pulse generator to provide pulses of short-duty cycle to minimize device heating. When pulse techniques are used, suitable peak-reading methods shall be used to measure the parameters of pulse amplitude, frequency, duty cycle, and pulse width. When dc techniques are used, device thermal equilibrium shall be achieved before the measurement is made.~~

FIGURE 4011–1. Test circuit for forward voltage.

4.2 ~~3.~~ Procedure.

4.2.1 ~~3.1~~ Condition A (dc ~~DC~~ method). The specified dc ~~test~~ forward current I_F shall be applied to the DUT ~~adjusted~~ by varying either the variable voltage source or the resistor (R) of the test circuit. The ~~value of~~ forward current I_F shall be measured using an ammeter. The forward voltage V_F shall be measured using a dc voltmeter. The voltmeter connections shall be made at specified points on the ~~device~~ DUT (see figure 4011–1) and always within the current connection points.

4.2.2 ~~3.2~~ Condition B (pulse method). ~~An oscilloscope shall be used to measure the pulse characteristics.~~ The specified forward current I_F pulse shall be applied to the DUT by adjusting the pulse generator or electronic switch ~~shall be adjusted~~ or by programming the automatic test equipment (ATE) to achieve the specified amplitude, frequency, and pulse width values (see 6.a.2). An oscilloscope or ATE shall be used to measure the pulse characteristics. ~~Device current (I_F) may be determined by measuring the voltage drop across a known value of resistor (R) where:~~

$$\cancel{I_F = \frac{V_{peak} \times \text{duty cycle}}{R}}$$

After adjusting pulse level to the correct value for the required forward current I_F, measure forward voltage V_F.

4.2.3 ~~3.3~~ Condition C (curve tracer method). ~~A Tektronix Model 576 or equivalent curve tracer shall be used.~~ The ~~device~~ DUT shall be tested by applying a positive voltage to the anode and limiting the current to within the manufacturer's ratings for forward current I_F. The forward voltage V_F ~~may~~ shall be determined by observing the curve tracer waveform at the specified forward current I_F.

5. Measurements. The following measurement shall be made:

a. The forward voltage (V_F).

5.1 Details for conditions A and C. When dc techniques are used, device thermal equilibrium shall be achieved before the measurements are ~~is~~ made.

5.2 Details for condition B. When pulse techniques are used, suitable peak reading methods shall be used to measure the parameters of pulse amplitude, frequency, duty cycle, and pulse width.

6. ~~4.~~ Summary. The following test conditions shall be specified in the applicable performance specification sheet or acquisition document:

a. Test condition letter.

1) For condition A, the test time shall be specified. If thermal equilibrium is required, the case or lead temperature shall also be specified.

2) For condition B, the pulse width.

b. Forward test current (I_F).

~~c. Forward voltage (V_F).~~

~~d~~. ~~Duty cycle and pulse width, when pulse techniques are used.~~

MIL–STD–750–4
w/CHANGE 1

METHOD 4011.5

FORWARD VOLTAGE

1. Purpose. The purpose of this test method is to measure the voltage across the device when a specified current flows through the device in the forward direction.

2. Test circuit. See figure 4011–1.

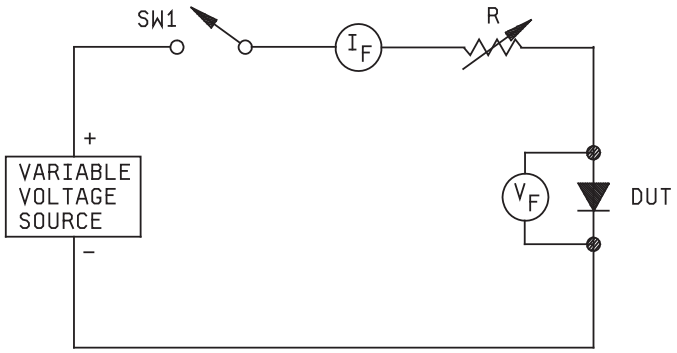

NOTE: When specified, switch SW1 shall consist of either an electronic switch or a pulse generator to provide pulses of short-duty cycle to minimize device heating. When pulse techniques are used, suitable peak-reading methods shall be used to measure the parameters of pulse amplitude, frequency, duty cycle, and pulse width. When dc techniques are used, device thermal equilibrium shall be achieved before the measurement is made.

FIGURE 4011–1. Test circuit for forward voltage.

3. Procedure.

* 3.1 Condition A (DC method). The specified test current (I_F) shall be adjusted by varying either the variable voltage source or the resistor (R). The value of I_F shall be measured using an ammeter. The forward voltage (V_F) shall be measured using a dc voltmeter. The voltmeter connections shall be made at specified points on the device and always within the current connection points.

* 3.2 Condition B (pulse method). An oscilloscope shall be used to measure the pulse characteristics. The pulse generator or electronic switch shall be adjusted to achieve the specified amplitude, frequency, and pulse width values. Device current (I_F) may be determined by measuring the voltage drop across a known value of resistor (R) where:

$$I_F = \frac{V\ peak\ X\ duty\ cycle}{R}$$

After adjusting pulse level to correct value for required I_F, measure forward voltage V_F.

* 3.3 Condition C (curve tracer method). A Tektronix Model 576 or equivalent curve tracer shall be used. The device shall be tested by applying a positive voltage to the anode and limiting the current to within the manufacturer's ratings for I_F. The forward voltage may be determined by observing the curve tracer waveform at the specified I_F.

4. Summary. The following conditions shall be specified in the applicable performance specification sheet or acquisition document:

* a. Test condition letter.

b. Test current (I_F).

c. Forward voltage (V_F).

d. Duty cycle and pulse width, when pulse techniques are used.