ENGINEERING PRACTICE STUDY

PROJECT NUMBER: 5961-2012-071

TITLE: DEVELOP BOND INTEGRITY REQUIREMENTS FOR SURFACE MOUNT END CAPS

20 July 2012

FINAL REPORT

Prepared by:

Kyle Carpenter

ATTCH 1

I. OBJECTIVES: An engineering practice study was conducted to develop a new MIL-STD-750 test method for evaluating the bond integrity of surface mount device (SMD) end caps.

II. BACKGROUND: Comments received by DLA Land and Maritime have indicated that the stresses imposed on SMDs during installation, operation, removal and rework have resulted in field failure issues.

A draft test method which simulates these stresses and includes post visual inspection and electrical endpoint requirements was issued for comment in April 2012.

III. RESULTS: The comments received by DLA Land and Maritime have been compiled and reviewed. The final results are documented in attachment 1.

IV. CONCLUSIONS: Based on the comments received, MIL-STD-750-2 will be revised to include Test Method 2038, Surface Mount End Cap Bond Integrity (attachment 1).

V. RECOMMENDATIONS: All essential comments must be accepted or resolved through the DLA Land and Maritime spokesmen. All suggested comments must be addressed by the authors responsible for the comments.

METHOD 2038

SURFACE MOUNT END CAP BOND INTEGRITY

1. Purpose. The purpose of this test is to simulate stresses imposed on a surface mount device (SMD) during installation, operation, removal and rework.

2. Apparatus. The apparatus for this test shall consist of suitable fixtures for applying specified stresses which may result in end cap (EC) attachment failure (See figures 1 and 2).

3. Procedure. Prior to testing the devices shall be inspected under 10X magnification looking for radial cracks, circumferential cracks, brazing condition, or misalignment of mating surfaces as well as overall alignment of the body with respect to tabs. These should be noted and compared with post inspection results. Electrical endpoints equivalent to Group A subgroup 2 shall be recorded. The test shall be conducted using the test conditions specified. All EC attachment tests shall be counted and the specified sampling, acceptance and added sample provisions shall be observed, as acceptable. Unless otherwise specified, the sample plan specified for the EC attachment strength test shall determine the minimum sample size in terms of the minimum number of stresses to be accomplished rather than the number of complete devices in the sample. EC attachments for test condition A, B and test condition D, where there is any soldering, adhesive, or other material used to mount the device may not increase the apparent EC attachment strength, and be restricted to just the end caps. Unless nondestructive limits are specified all EC attachment stressors shall be considered destructive tests.

4. Test Conditions.

4.1 Condition A - CTE mismatch. This test shall be accomplished by solder mounting the SMD in the center of a 2 inch x 2 inch square FR4 PCB of 0.0625 inch thick with a copper pad of sufficient size to not allow a lifting off of the PCB . The devices shall be subjected to temperature cycling under the following conditions:

10 cycles
-40C to +125C
10 minutes at extremes

4.2 Condition B - Tab Pull (Figure 3). The device shall be oriented along the Y axis. The fixed end cap shall be mounted so that only itself and no part of the body is providing aid. The specified force shall be applied without shock to each end cap. Wire may be used as long as it is attached in a manner that will not aid in the force measurement.

Time = 1 minute
Force = as specified in detail specification

4.3 Condition C - Tab shear Axis X1, X2 (Figure 4). With the soldered SMD in the center of a 2 inch x 2 inch square FR4 PCB of 0.0625 inch thick with a copper pad of sufficient size to not allow a lifting off of the PCB, a mechanism that can hold the edges of the PCB with the device mounted and oriented along the Y axis shall be used. A twisting motion shall be applied in a manner that results in diagonal corners rotating off axis at least 0.0625 inches.

4.4 Condition D - Tab shear Axis Z1, Z2 (Figure 5). With the soldered SMD in the center of a 2 inch x 2 inch square FR4 PCB of 0.0625 inch thick copper pad of sufficient size to not allow a lifting off of the PCB, a mechanism that can hold the edges of the PCB with the device mounted and oriented along the Y axis. A flexing motion shall be applied in a manner that results in mounted edges to flex at least .625 inches off the axis.

5. Failure Criteria

Inspected devices under 10X magnification looking for:
a. Radial cracks – either appearing or have propagated
b. Circumferential cracks - either appearing or have propagated
c. Brazing – showing fractures or fissures

Electrical endpoints:
a. Failures exceeding 100% of initial value
b. Failures exceeding specification limit

Figure 2038-1. Sample apparatus fixture with force measuring gauge.

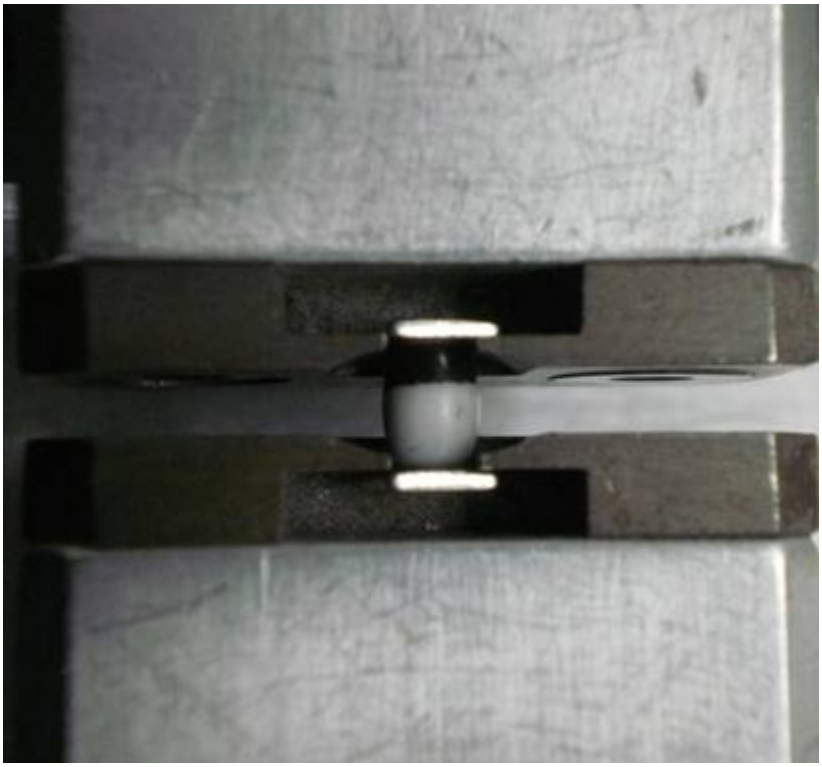

Figure 2038-2. Close up view of sample apparatus fixture.

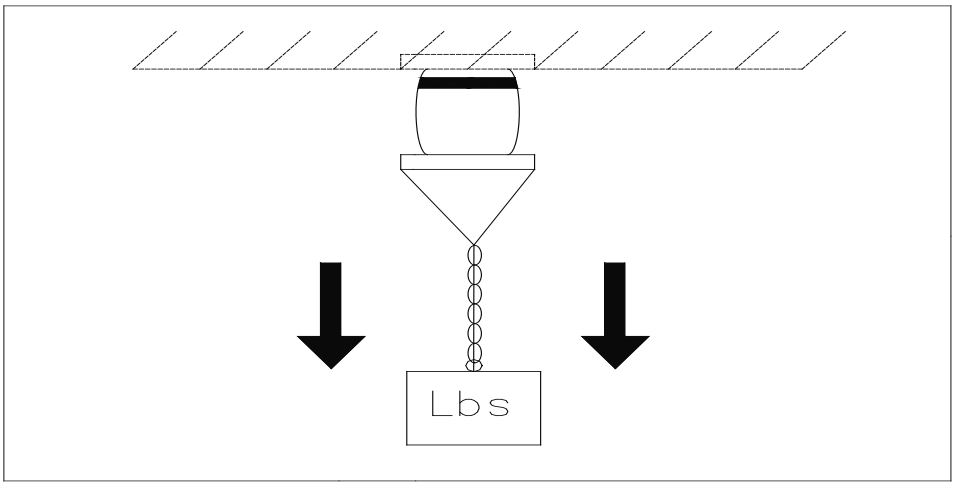

Figure 2038-3. Condition B.

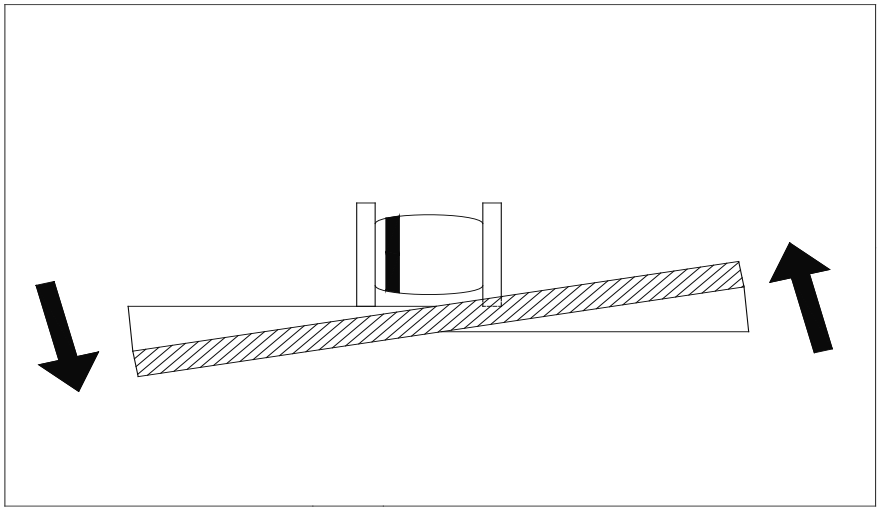

Figure 2038-4. Condition C.

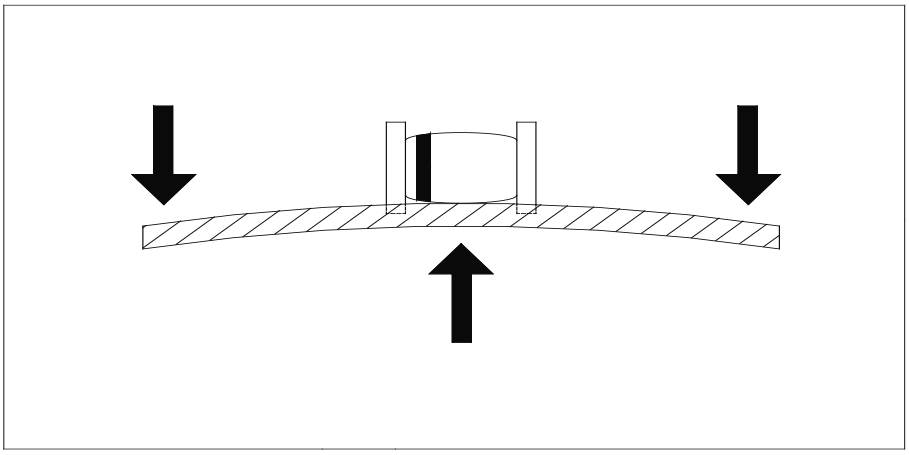

Figure 2038-5. Condition D.