DEFENSE LOGISTICS AGENCY
DEFENSE SUPPLY CENTER, COLUMBUS
POST OFFICE BOX 3990
COLUMBUS, OH 43218-3990

IN REPLY REFER TO

DSCC-VAT (K Bernier/DSN 850-0563 / (614) 692-0563) March 16, 2010

MEMORANDUM FOR MILITARY/INDUSTRY DISTRIBUTION

SUBJECT: Engineering Practices Study to improve the surge current testing of Tantalum capacitors. Project number 5910-2010-025

Objective

EP study to update surge current test procedures in MIL-PRF-39003 and MIL-PRF-55365

Working with G11 and NASA to improve surge current test procedures and to make the testing the same in all specification sheets of MIL-PRF-39003 and MIL-PRF-55365. The study will modify the requirements to help ensure all capacitors receive an effective surge current screening to remove suspect parts.

Currently there are three different requirements for surge current testing: MIL-PRF-39003, MIL-PRF-39003/10, and MIL-PRF-55365. A summary of the recommended changes, reason for changes, and summary are below. The detailed changes to the two specifications follow.

Recommended changes to MIL-PRF-39003 and MIL-PRF-55365:

The minimum peak current should be at least Ipk = Vr/(1.0 + ESRmax) where ESRmax is specified at 25°C of the tested capacitor.

The maximum allowed circuit resistance shall be 1 ohm.

Each capacitor must reach target voltage in at most 10 times the capacitance value to be tested (e.g. 1ms for 100uF capacitor).

The test method shall require periodic verification of the minimum peak current.

Require the capacitor bank to be at least 50 times larger that the total capacitance tested by a single test.
*** This would improve the chances of properly testing parallel capacitors.***

Make the test method uniform for all tantalum specifications.

Reason for changes.
The purpose of the surge current testing is to identify and remove from the lot capacitors that cannot survive reasonable expected inrush currents.

Almost all customers expect the peak current to be at least Ipk = Vr/(1.0 + ESRmax).

The existing test methods are not consistent with each other in the Military Specifications MIL-PRF-39003 and MIL-PRF-55365.

Federal Recycling Program Printed on Recycled Paper

Summary of what is to be achieved.

Minimum required peak current for each capacitor.
Maximum circuit resistance per capacitor.
Maximum time allowed for each capacitor to reach voltage.
Minimum size of capacitance bank for total tested capacitance.
Minimum voltage to be achieved during charge.
Maximum voltage remaining after discharge.
Minimum number of cycles and cycle duration
A method to verifying each capacitor receives the minimum peak surge current. "Do an equipment check each day".
Reduce the number of cycles required for each test cycle.

Proposed test method:

Section 3 changes and method.

MIL-PRF-39003

3.30 Surge current (when specified in the PIN). When tested as specified in 4.7.26, there shall be no blown fuses or out of spec (DCL at +25°C) conditions, or visible indications of damage.
In addition the capacitors shall meet the following requirements:

DC leakage:	Shall not exceed the applicable value specified in 3.11.
Capacitance:	Shall be within the tolerance specified (see 3.1).
Dissipation factor:	Shall not exceed the requirement specified in 3.13.

MIL-PRF-55365

3.21 Surge current (optional). This test is a user specified option that is ordered by adding a letter to the PIN (see 1.2.1.7). When tested as specified in 4.7.18, there shall be no blown fuses or out of spec (DCL at +25°C) conditions, or visible indications of damage.
In addition the capacitors shall meet the following requirements:

DC leakage	As specified in 3.9.
Capacitance	As specified in 3.10
Dissipation factor	As specified in 3.11.

Section 4 changes and method.

MIL-PRF-39003

~~4.7.26 Surge current (when specified in the PIN) (see 3.30). Capacitors shall be subjected to 3 consecutive cycles under the following conditions:~~

4.7.26 Surge current (when specified in the PIN) (see 3.30). Capacitors shall be subjected to 3 consecutive cycles under the following conditions:

a. Temperature: +25°C ± 5°C.

~~b. Rated voltage ± 2 percent shall be applied for 4 ± 1 seconds. The power source shall have an energy storage bank of 50,000 µF (minimum) across the output terminals.~~

b. Applied voltage: Rated voltage ±2 percent from a power source having an energy storage bank of at least 50 times larger than the total capacitance value being tested. The capacitors shall be subjected to a minimum peak current (Ipk) = Vr/(Rdc + ESRmax), ~~and the energy storage bank voltage drop of -2% of rated voltage.~~

where: Vr = Rated voltage.

Rdc = Total resistance in the circuit.

ESRmax = Maximum ESR at + 25°C.

~~c. The capacitors shall then be discharged for 4 ± 1 seconds to a voltage below 1 percent of the rated voltage.~~

c. Charge cycle: Each capacitor must reach target voltage in at most 10 times the capacitance value to be tested (e.g. 1ms for 100uF capacitor) and hold that voltage for 3 ± 2 seconds.

~~d. The total dc resistance (excluding the capacitor) including the wiring, fixturing, and output impedance of the regulated power supply to each test position during the charging cycle shall be 1 ± 0.2 ohm.~~

d. Discharge cycle: 3 seconds ±2 second to a voltage below 1 percent of rated voltage.

e. The total dc resistance including the capacitor, wiring, fixturing, and output impedance of the regulated power supply to each test position during the charging cycle shall be a maximum of 1 ohm.

f. The power supply shall be capable of supplying the specified rated dc voltage for the capacitors under test, at a minimum current level of 15 amps.

g. Each capacitor under test shall have a 1 to 5 ampere fuse connected in series. Total resistance between the energy source and each capacitor under test (including the fuse) shall be 1.0 ohm maximum. Test equipment (including ohm resistance) shall be 10 amperes minimum, ringing (overshoot) of the applied surge voltage (as measured at the terminals of the capacitor(s) under test) shall not exceed 1.30 times (50 V and less and 1.20 for 75 V) the 85°C working voltage of the capacitor. Peak current to any group of capacitors under test shall be achieved in less than 100 microseconds.

h. surge current test setup (typical or equivalent). See figure ??

i. Any blown fuse or out of spec (DCL at +25°C) conditions or visible indications of damage shall reject the capacitor.

j. system shall be checked at the beginning of each 8 hour shift. The necessary minimum level of resistance (Ω) and inductance (L) are achieved when the peak current level of a single style capacitor (330 uF at 6 Working Volts dc) is at least 18 amperes when tested at 6 working volts dc. A dc resistance measurement shall be used for calibration.

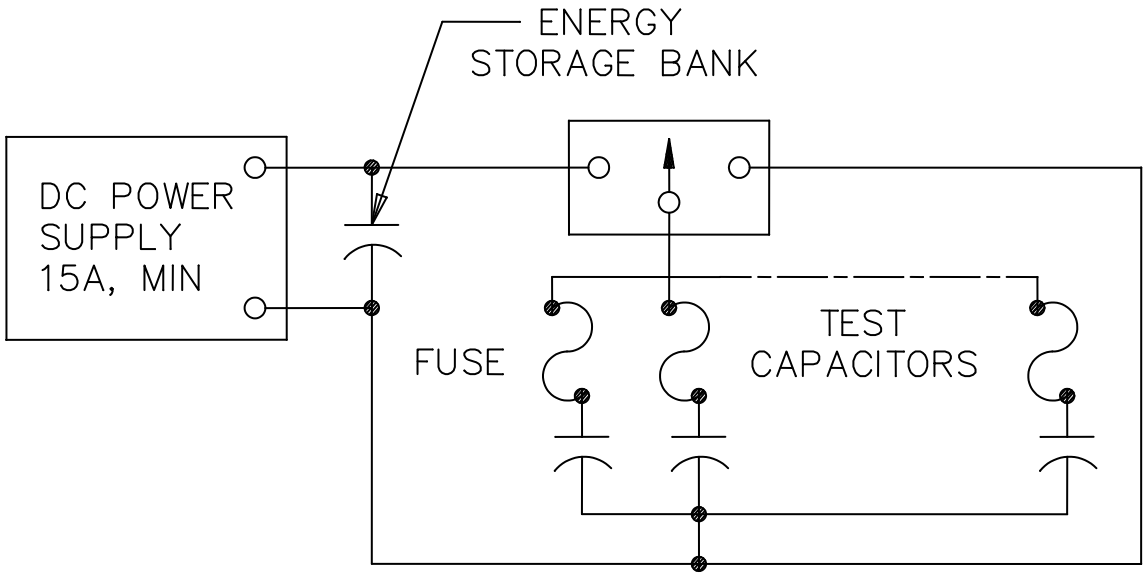
ENERGY
STORAGE BANK
DC POWER
SUPPLY
15A, MIN
FUSE
TEST
CAPACITORS

FIGURE ??

~~4.7.18 Surge current (optional) (see 3.21). This test, when specified (see 1.2.1.7), shall be performed on a 100 percent basis either before or after Weibull/voltage aging as indicated in 4.7.18a. Capacitors shall be subjected to ten cycles at each temperature:~~

4.7.18 Surge current (optional) (see 3.21). This test, when specified (see 1.2.1.7), shall be performed on a 100 percent basis either before or after Weibull/voltage aging as indicated in 4.7.18a. Capacitors shall be subjected to 5 cycles at each temperature:

a. Temperature: Option A: (+25°C ±5°C; after Weibull grading or voltage aging) or
Option B: (-55°C -5°C, +0°C and +85°C ±5°C; after Weibull grading or voltage aging) or
Option C: (-55°C -5°C, +0°C and +85°C ±5°C; before Weibull grading or voltage aging).
Option Z or no option: No test required.

~~b. Applied voltage: Rated dc voltage ±2 percent from a power source having an energy storage bank of 50,000 µF (minimum) across the output terminals.~~

b. Applied voltage: Rated voltage ±2 percent from a power source having an energy storage bank of at least 50 times larger than the total capacitance value being tested. . The capacitors shall be subjected to a minimum peak current (Ipk) = Vr/(Rdc + ESRmax), ~~and the energy storage bank voltage drop of -2% of rated voltage.~~

where: Vr = Rated voltage.

Rdc = Total resistance in the circuit.

ESRmax = Maximum ESR at + 25°C.

~~c. Charge cycle: 4 seconds ±1 second.~~

c. Charge cycle: Each capacitor must reach target voltage in at most 10 times the capacitance value to be tested (e.g. 1ms for 100uF capacitor) and hold that voltage for 3 ± 2 seconds.

~~d. Discharge cycle: 4 seconds ±1 second to a voltage below 1 percent of rated voltage.~~

d. Discharge cycle: 3 seconds ±2 second to a voltage below 1 percent of rated voltage.

~~e. The total dc resistance (excluding the capacitor) including the wiring, fixturing, and output impedance of the regulated power supply to each test position during the charging cycle shall be a maximum of 1.2 ohm.~~

e. The total dc resistance including the capacitor, wiring, fixturing, and output impedance of the regulated power supply to each test position during the charging cycle shall be a maximum of 1 ohm.

f. The power supply shall be capable of supplying the specified rated dc voltage for the capacitors under test, at a minimum current level of 15 amps.

g. Each capacitor under test shall have a 1 to 5 ampere fuse connected in series. Total resistance between the energy source and each capacitor under test (including the fuse) shall be 1.0 ohm maximum. Test equipment (including ohm resistance) shall be 10 amperes minimum, ringing (overshoot) of the applied surge voltage (as measured at the terminals of the capacitor(s) under test) shall not exceed 1.30 times (50 V and less and 1.20 for 75 V) the 85°C working voltage of the capacitor. Peak current to any group of capacitors under test shall be achieved in less than 100 microseconds.

h. surge current test setup (typical or equivalent). See figure ??

i. capacitors shall be placed in the chamber at the specified temperature, is such a position with respect to the air stream that there is substantially no obstruction to the flow of air across and around the capacitors. They shall be soaked for a minimum of 1/2 hour or until all capacitors have stabilized to the chamber temperature. The first temperature to be tested shall be -55°C. the test sequence shall consist of 10 cycles at -55°C and 10 cycles at +85°C. a cycle shall be of closing the switch and allowing the capacitors under test to charge and discharge through 1.0 ohm maximum.

j. Any blown fuse or out of spec (DCL at +25°C) conditions or visible indications of damage shall reject the capacitor.

k. system shall be checked at the beginning of each 8 hour shift. The necessary minimum level of resistance (Ω) and inductance (L) are achieved when the peak current level of a single style capacitor (330 uF at 6 Working Volts dc) is at least 18 amperes when tested at 6 working volts dc. A dc resistance measurement shall be used for calibration.

After the final cycle, the dc leakage, capacitance, and dissipation factor shall be measured as specified in 4.7.6, 4.7.7, and 4.7.8, respectively.

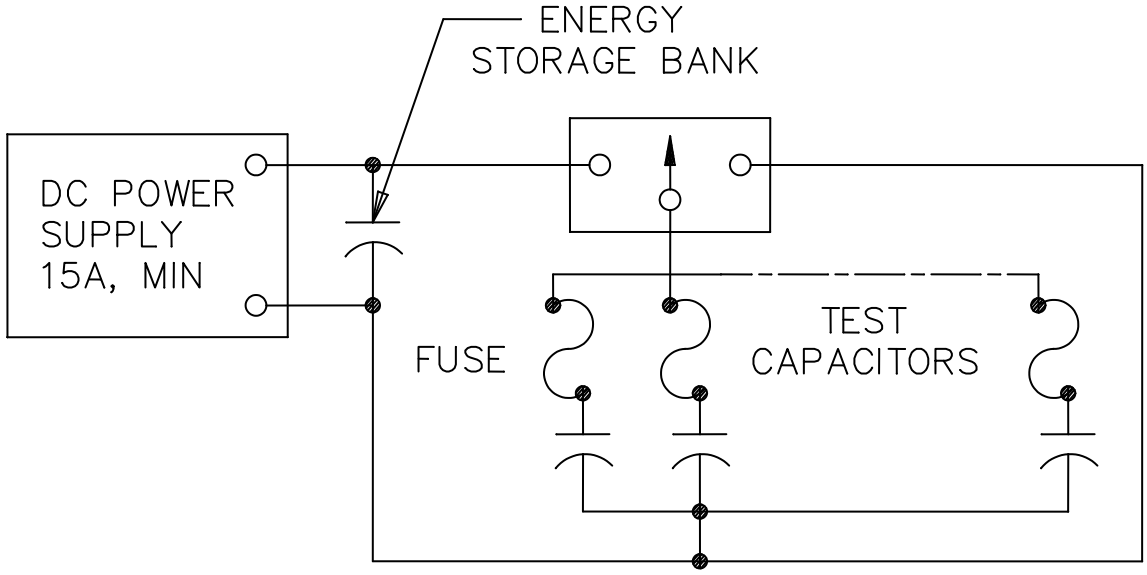

FIGURE ??

Concurrence or comments are required at this Center no later than April 30, 2010 (45 days from the date of this letter). Comments from military departments must be identified as either “Essential” or “Suggested”. Essential comments must be justified with supporting data. Military review activities should forward comments to their custodians or this office, as applicable, in sufficient time to allow for considering the department reply.

Please forward your comments or concurrence electronically to the project engineer listed below. This can be done in the form of a return email, with or without an attached text file. If an electronic response is not possible, we will accept comments via letter, facsimile, or phone call but only after you have contacted the project officer. Any further coordination concerning these documents will be circulated only to firms and organizations that furnish comments or reply that they have an interest.

The point of contact for these documents is Mr. Ken Bernier, DSCC-VAT. The preferred method of contact is via email: kenneth.bernier@dla.mil. Mr. Bernier can also be reached by phone at 614-692-0563/DSN 850-0563, or by facsimile 614-693-1644.

MICHAEL A. RADECKI
Chief
Electronic Components Team